Thames Valley Controls

Ethos Two Controller

User Guide

TVL No. 351

Issue No. 27

Date: January 2026

Thames Valley Controls | Unit 15 | Manor Farm Industrial Estate | Flint | Flintshire | CH6 5UY | T: +44 (0) 1352 793222 | F: +44 (0) 1352 793255 | info@tvcl.co.uk

Contents

Contents 2
1. Introduction 4
1.1. Purpose 4
1.2. Scope 4
1.3. Acronyms and Definitions 4
2. System Description 5
2.1. Safety Warnings / Precautions 5
2.2. Contacts 5
2.3. System Overview 6
2.4. System Key Features. 7
2.5. Main Controller Specification 8
2.6. Environment 8
2.7. Standards 9
2.8. Certificates 9
2.9. Help - Fault Finding Procedures 9
2.10. Main Controller CPU Hardware 10
3. MMI – Quick Start 12
3.1. MMI Key 12
3.2. Screen Calibration 12
4. Service and Feature Descriptions 14
4.1. Main Modes of Operation 14
4.2. Call Collective Modes 14
4.3. Group Operation 15
4.4. Door Settings 17
4.5. Indicator Settings 17
4.6. Optional Service and Feature Descriptions 18
4.7. Checking Feature Descriptions 21
4.8. Motion Feature Checks 22
5. Solutions and Event Logger 23
5.1. Solutions 23
5.2. Event Logger 23
5.3. I/O Trace 24
6. List of Events 25
7. Parameter Adjustment and Storage 50
7.1. Parameter Adjustment 50
7.2. Precautions 50
8. Parameter Modification Procedure 51
8.1. Lift Parameter Modification 51
9. Software Upgrade Procedure 52
9.1. Lift and Display Board Software Upgrade 52
9.2. ETSD Card Software Upgrade (only applies if ETSD card fitted) 54
10. Expansion Modules 55
10.1. Call Modules 55

10.2. Feature Modules ... 56
10.3. Serial Network - Installation Guidelines ... 56
10.4. Serial Network - EMC Guidelines (CAN / Ethernet / RS485 / RS232) ... 57
10.5. Serial Network - Fault Finding Procedures ... 57
11. General Installation Guidelines ... 68
11.1. Step by Step Installation Sequence ... 68
11.2. Testing the Lift ... 70
11.3. General EMC Guidelines ... 73
11.4. Maintenance Required ... 74
12. Traction Lift Installation Guide ... 75
12.1. Precautions ... 75
12.2. Introduction ... 75
12.3. Step by Step Installation Sequence ... 75
13. Hydraulic Lift Installation Guide ... 82
13.1. Introduction ... 82
13.2. Step by Step Installation Sequence ... 82
14. In Service Operating Instructions ... 84
14.1. Introduction ... 84
14.2. Shaft access reset procedure ... 84
14.3. Limax3CP Pre-triggered Stopping System (only if fitted) ... 84
Appendix A: Devices Needed for Initial Site Installation - Lift controller using the Limax3CP. ... 86
Appendix B: Limax3CP Setup Guide (only if fitted) ... 88
Appendix C: Limax3CP Annual Testing (only if fitted) ... 97
Appendix D: Handwind Unit – HW03 ... 102
Appendix E: Handwind Unit – HW02 with Switch ... 103
Appendix F: Handwind Unit – HW02 ... 104
Appendix G: Laser Door Zone ... 105
Appendix H: Magnetic Door Zone ... 106
Appendix I: E300 Drive – User Menu A Parameters ... 107
Document Change Log ... 109

1. Introduction

This manual is to be read in conjunction with the main wiring schematics. It is important that you familiarise yourself with the manual and drawings before commencing any work with the Ethos Two controller.
TVC accepts no liability for any damage resulting from incorrect or inappropriate installation or adjustment of optional parameters of the equipment.
TVC reserves the right to change the specification of the product, its performance or the contents of the manual without notice.

1.1. Purpose

This manual is to be used as a guide to aid installation, servicing and fault finding of an Ethos Two control panel.
The document is intended to be read by lift installers, testers and service engineers.

1.2. Scope

This manual covers all main variants of the Ethos Two controller, and key ancillaries supplied with the system.

1.3. Acronyms and Definitions

ALM	Alarm Input
ARO	Advance Door Open – Relevelling Output
BFR	Bottom Floor Reset
BKR	Brake Relay
CAN	Controller Area Network
CG	Car Gate Locks
GL	Landing Gate Locks
DZ	Door Zone
DZC	Door Zone (Calculated)
DZM	Door Zone Circuit Monitor
EC1	Eco Mode Output
ETSD	Emergency Terminal Slowdown
FAM	Fire Recall
FSR	Fire Service
LAR	Lift Available
LISI	Lift In Service Indicator
LTLR	Low Speed Timer
MC1	Main Motor Contactor
MPU	Micro Processor Unit
NERR	No Error
PS	Control Circuit Power Supply Monitor
PTR	Panel Test Relay (Emergency Electrical Operation)
SAF	Safety Output
SI3	Spare Input (3)
STR	Start Relay
TFR	Top Floor Reset
TDN	Test Down (Inspection Down)
TTR	Test Control Relay (Inspection Control)
TUP	Test Up (Inspection Up)
TVC	Thames Valley Controls

2. System Description

2.1. Safety Warnings / Precautions

Be aware that the lift panel will contain equipment that is supplied with potentially lethal voltages. Please make sure the panel is isolated before carrying out any installation work or modifications.

Observe normal precautions for handling electronic devices; avoid static electricity, dampness and extreme temperatures.
Please consult main drawings for contract specific wiring and setup.

Installation and servicing of this control equipment must be carried out by suitably qualified and trained personnel. A thorough risk assessment must be performed before carrying out any work on this equipment.

2.2. Contacts

If you have a question concerning safety, please do not hesitate to contact TVC:

Address:
Thames Valley Controls Ltd.
Manor Farm Industrial Estate,
Flint,
Flintshire.
CH6 5UY.

Customer Service:
Telephone: +44(0) 1352 793222
Email: customersatisfaction@tvcl.co.uk

Sales:
Telephone: +44(0) 1352 793222
Email: info@tvcl.co.uk
Website: http://www.tvcl.co.uk

2.3. System Overview

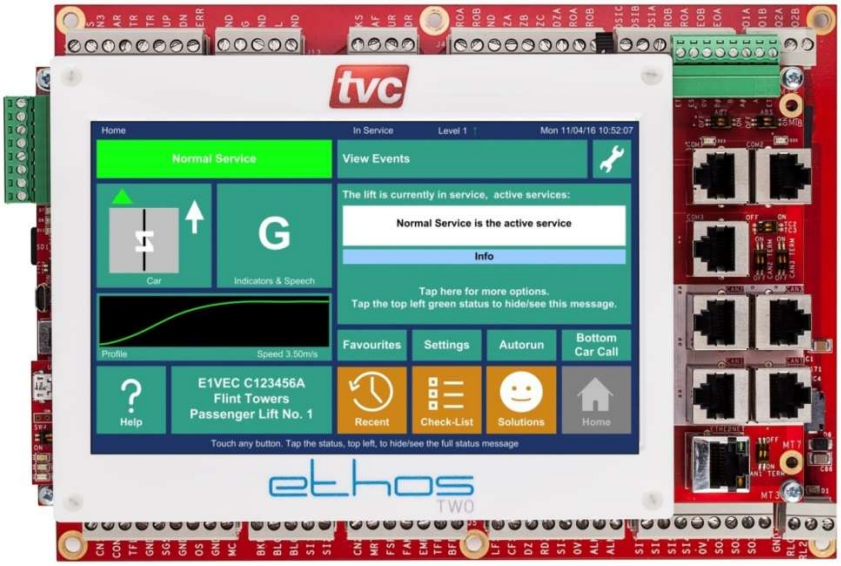

The TVC Ethos Two controller is a sophisticated but easy-to-use lift control system. Ethos Two has been developed to be user-friendly for the installer, tester, service and call-out engineer whilst offering lifetime value to the end-user. Ethos Two provides helpful test and fault finding routines to enable fast installation, commissioning, and trouble-shooting.

The overall Ethos Two Lift Control System comprises various electronic modules and a motor panel section plus shaft and car wiring. The Ethos Two main unit and associated modules are usually mounted in a single cabinet and linked via the trailing flexes to a car mounted module.
The lift motor operation is controlled by the motor panel section, which receives signals from the microprocessor, such as pilot relays for up, down, brake, open door and close door signals. The motor panel section sends signals back to the microprocessor units regarding which lift function it is carrying out, i.e. moving up, moving down, opening or closing doors, door zone or locks made etc.
The motor panel section also sends and receives signals from the shaft and car, these being locks and safety circuit signals from the shaft wiring, door operator, car gate and safety circuit signals from the car wiring.
Signals to and from the shaft and car are also transmitted and received by the microprocessor unit. These include landing calls, position indicators; position resets and fire switch etc. from the shaft wiring and car calls, position indicators, service switch controls etc. from the car wiring.

A basic Ethos Two system comprises of the main control module, which includes the CPU board + TFT MMI Display interface, Motherboard I/O and an associated Car module to interface to car calls and car I/O. Various options are available for landing call entry, including 8 way or 16 way call cards, QuickFlex landing nodes or the HCD navigator system (See TVC factory for details). The main control module is equipped with a clear and intuitive touch screen user interface with short cuts for fast and easy menu navigation.

Systems requiring more floors and or features can take advantage of plug in expansion modules; such as the 24 way output module and 8 way input or output modules. As the Ethos Two system is a modular system multiple modules can be plugged together to form one contiguous modular Ethos Two system.

The Ethos Two control system uses a distributed field-bus network for interfacing calls and I/O to the main Ethos Two lift controller. The field-bus uses a proprietary CAN bus protocol developed by TVC. The system is used in place of normal discrete wiring for calls and car related input and outputs. Instead of each push and call lamp being directly connected to the panel, in the motor room, they can be connected to local modules that are distributed about the car and lift shaft. This will depend on particular installation requirements.

The systems voltages are derived from a transformer/power supply module mounted on the motor panel and are fed via a wiring looms to the control modules. High reliability, field proven industrial standard components are used throughout the system and are readily available from many sources.

The system has signal protection, where all external incoming signals are optically isolated and filtered. Motor panel signals are mainly at 110Va.c and 24Vd.c. Call signals e.g. landing and car push feeds / acceptance lights are 24Vd.c.

2.4. System Key Features.

Ethos Two is a modular lift control system, various expansion cards can be fitted to the system to allow for more calls and features. The system can be configured to function as an 8 car dispatcher-less group or a Hall Call Destination system in conjunction with the TVC Navigator system. The system uses several CAN bus connections to facilitate this. Consult the contract drawings and expansion module section for further information.

The system can be configured with the following limits:

Number of Floors:	64 front and rear openings, short floors (min 20mm), long floors.
Group Operation:	8 cars Dispatcher-less or 8 cars Hall Call Destination.
Machine:	Traction - AC / DCSCR, Hydraulic, Hydraulic – Electronic.
Speed:	0.3 – 8.0 m/s.
Features:	Re-levelling / Advanced door opening / Advanced brake lift. See Service / Feature descriptions for full list.

The Ethos Two builds on the original Ethos controller from TVC with these key new features:

Ethos Two is based around a simple, intuitive touch screen that provides a clear indication of the lift's current status. The screen gives the user all the information they need, at their fingertips. Extensive help for all features and faults is displayed on the screen in plain English.

The new Car Module contains the "RideSensor" option. This records car ride performance via a 3-axis accelerometer, checks the ride performance in real-time and can spot any issues before the passenger does. G-force-limit records 'Over G' events such as crash stopping or safety gear operation which is useful for analyzing passenger claims of abrupt journeys.

The new event logger stores every event against a time-line including direction, position, load, inputs & outputs. Colour coded fault finding filtering critical and non-critical events and searching options quickly help get to the core of a problem. All events are stored on a large memory Micro SD Card this can store years of archived events for future reference.

Service Alerts record the number of operations of key components. As well as recording door and journey counts, it records door operations per floor for an indication of landing door gear wear.

Parameter storage on the SD Card allows easy transfer of settings, this makes upgrades and repairs faster and simpler, no special software is needed to upgrade the firmware of the device, so software upgrades can be performed without waiting for an engineer with dedicated tools.

The Ethos Two has many handy automated features including: Automated shaft self-learning and automatic stopping point adjustment for quicker installations.

Integrated speed pattern generation with "Direct-to-Floor" approach, so no need to adjust slowing distances and speeds for different floor heights. The pattern also allows alternate speed profiles to be selected. Profiles include ride settings for Comfort, Economy and Ultimate Performance.

A serial drive interface provides fault information from the drive, integrated into the logger.

Hoist Mode allows the elevator to be controlled during installation without all features connected. Jog motor feature gives the engineer the option to run the motor from the screen to check starting and stopping performance.

Machine room-less installations are easier with the CAN serial modular system that allows for flexible installations with either shaft or panel mounted modules. The main control module also has a remote MMI feature that can be mounted in the smallest of rescue panels.

2.5. Main Controller Specification

System Supply:	400V a.c. + 10% - 15% 50 Hz. Note: Other voltages available - consult factory.
Main Processor Specification	
Supply:	24V d.c. / 0.5A (12W)
Low power shut down voltage:	20V d.c.
Max Voltage on 110V inputs:	120V
Max Voltage on 24V inputs:	30V
Max Voltage on outputs:	120V
Lift + MMI CPU Board:	32bit ARM CPUs with 4Mb Byte Flash, 24Mb RAM.
Features:	3 to 5 CAN Ports 2 to 3 RS232 Ports 2 to 3 RS485 Ports Ethernet 10/100M USB 5-24V Incremental Encoder Interface Digital and Analogue Speed Pattern 7" TFT touch screen (800x480) Mono audio.

2.6. Environment

Storage Temperature:	-10 ºC to +60 ºC
Operating Temperature:	0 ºC to +40 ºC Note: The ambient temperature surrounding the controller cabinet must be between 0 ºC and 40 ºC.
Humidity Operating Range:	0 - 90% relative humidity (non-condensing)
IP Rating	IP2X Protect against dust, moisture and water ingress.

2.7. Standards

The controller meets the following standards / specifications:

BS EN 81-20:2020. Safety rules for the construction and installation of lifts. Lifts for the transport of persons and goods. Passenger and goods passenger lifts.

BS EN 81-50:2020. Safety rules for the construction and installation of lifts. Examinations and tests. Design rules, calculations, examinations and tests of lift components.

BS EN 12015:2020. Electromagnetic compatibility. Product family standard for lifts, escalators and moving walks. Emission.

BS EN 12016:2013. Electromagnetic compatibility. Product family standard for lifts, escalators and moving walks. Immunity.

BS EN 81-73:2020. Safety rules for the construction and installation of lifts. Particular applications for passenger and goods passenger lifts. Behavior of lifts in the event of fire ***(if requested)***

BS EN 81-72:2020. Safety rules for the construction and installation of lifts. Particular applications for passenger and goods passenger lifts. Firefighters lifts ***(if requested)***

BS EN 81-1:1998+A3:2009. Safety rules for the construction and installation of lifts. Electric lifts

BS EN 81-2:1998+A3:2009. Safety rules for the construction and installation of lifts. Hydraulic lifts

2.8. Certificates

Certificates for EMC compliance and Safety compliance can be supplied when requested - see factory.

2.9. Help - Fault Finding Procedures

Ethos Two provides a number of software tools designed to assist the engineer in fault finding, these tools are simple to use, The key fault finding tools include:

- The “Solutions” button, takes you to a list of current out of service events.
- The “Event Logger”, with extensive help system and out of service “Time Line”.
- The “Help” key on the main screen, gives an overview on MMI and hardware operation.
- Context sensitive help is always available on the screen footer.

See overleaf for a description of the main CPU.

2.10. Main Controller CPU Hardware

Configuration Switches and Layout

Main CPU

Switch	Description	Normal Position
SW7	Watchdog Disable	Norm (Lower)
SW8	Main CPU Reset Switch.	OFF (Not Pressed)
SW9 (C1)	Bootloader Activation	OFF
SW9 (C2)	Shaft Encoder Factory Test	OFF
SW13 (1)	ETSD Card Disable OKS.	ON (if ETSD Card not fitted) / OFF (if ETSD Card fitted)
SW13 (2)	ETSD Card Disable Pattern.	ON (if ETSD Card not fitted) / OFF (if ETSD Card fitted)
SW14	Encoder Supply	Link in 24V position
CAN1 TERM	Termination for Group Bus	ON (if end node on Group bus)
CAN2 TERM	Termination for Expansion Bus	ON (if end node on the bus e.g. no EMU)
CAN3 TERM	Termination for ABS Enc.	ON (normally used for Absolute Encoder)
TC2	COM2 RS485 Termination	OFF
TC3	COM3 RS485 Termination	OFF
ABS	Encoder Bias Resistors	OFF (used for single ended encoder signals)
ABT	Encoder Termination	OFF

MMI Board

Switch	Description	Normal Position
SW5	MMI CPU Reset Switch.	OFF (Not Pressed)
SW4 (C1)	Bootloader Activation	OFF
SW4 (C2)	Touch Screen Calibration	OFF

ETSD Card

Switch	Description	Normal Position
SW3	Bootloader Link	Upper Position (Edge of board)
SW1	ETSD CPU Reset Switch.	OFF (Not Pressed)
SW2 (1)	Not Used	OFF
SW2 (2)	Not Used	OFF
SW2 (3)	Not Used	OFF
SW2 (4)	Bootloader Activation	OFF
SW4 (CAN 4)	Termination for ABS Enc.	ON (normally used for Absolute Encoder)
SW5 (CAN 5)	Termination for Landing Bus	ON (if end node on landing bus)
J4	COM4 RS485 Termination	OFF

E2 Main CPU Hardware Layout

ETSD Card Disable Switch

SW13 – 2 switches disable the ETSD pattern and also link out the OKS relay when the optional ETSD card is not used.

Analogue Speed Pattern Interface

2 channel analogue 0 – 10V outputs for speed pattern and optional pre-torque.
2 channel analogue 0 – 10V inputs for voltage monitoring.

⊘	PAT	Pattern Out
⊘	A0V	0V Pattern
⊘	PTQ	Pre-Torque
⊘	A0V	0V Pre-Torq
⊘	M1	Vol. Monitor 1
⊘	M2	Vol. Monitor 2
⊘	A0V	0V Vol. Mon.
⊘	ET	Earth / Screen

Safety Circuit LED's

4 x LED's for monitoring the main points in the safety circuit, located on the left hand edge of the motherboard.

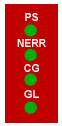

Loop LED's

3 x LED's on main CPU board + 3 x LED's on display card.
Green – loop, program running when flashing.
Yellow – SD card access in progress.
Red – Bootup or fault indication.

SD Card Sockets

SD1 - Micro SD card used for logging faults and storing parameters. Also used for upgrading the lift firmware using the onboard boot-loader (see overleaf).
SD2 - Optional Micro SD card on the display card used for upgrading the MMI firmware using the onboard boot-loader.

Watchdog Disable Switch for Main CPU

Switch used to disable external watchdog whilst debugging or for flashing boot-loader.

Micro USB Sockets

Micro USB sockets on both the main CPU and display card for log downloads and firmware upgrades. Acts as USB flash drive when connected to a PC.

Display Card Reset Switch

SW5 – Reset switch located under the bottom left hand edge of the display card.

E2 Main CPU Layout

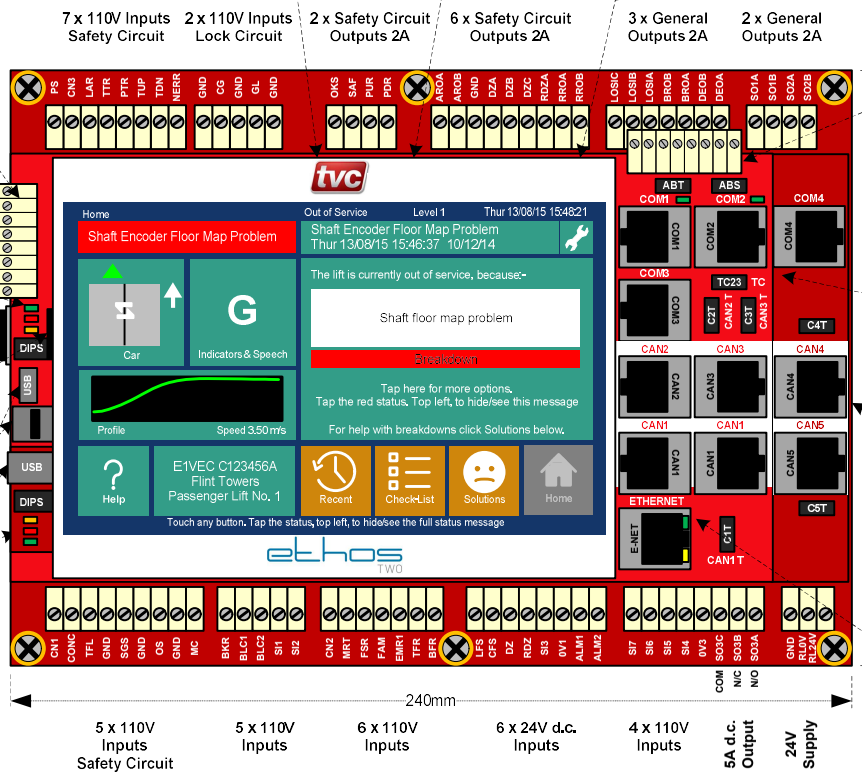

Main CPU Reset Switch

SW8 – Reset switch located on top edge of the main CPU board.

Incremental Encoder Interface

2 channel differential, push-pull or single ended, isolated, encoder interface. Channels A/#A and B/#B.
SW14 – Jumper selects 24V or 5V Encoder Supply.
Dips ABT – Select 120 Ohm termination across differential inputs (normally off).
Dips ABS – Select bias resistor if single ended encoder used (normally off).

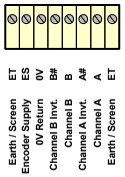

COM1,2,3 (4) Ports

COM1 – RS232 port for indicator / speech encoders.
COM2 – RS232 or RS485 for energy meter or other peripherals.
COM3 – RS485 for drive communications.
COM4 – RS232 or RS485 spare on optional ETSD card

CAN1,2,3 (4,5) Ports

CAN1 – CAN port for group communications, or optional landing network on a simplex. (2 connectors in parallel for daisy chaining group network).
CAN2 – For panel expansion modules and car network.
CAN3 – Used for optional absolute encoder or drive communication. (CAN3 is limited to 125kbps)
CAN4 – For absolute encoder, on optional ETSD card.
CAN5 – CAN port for landing network or other on ETSD card.

All CAN ports have termination resistors that can be switched in using associated DIP switches.

Ethernet

Ethernet - 10/100M Ethernet connection, can be used to with ftp (file transfer protocol) to the on board SD1 card for parameter and log uploading. Also allows remote monitoring via telnet.
Can be configure for fixed IP or DHCP.

Precautions

The module must be mounted in suitable protective control panel. Observe normal precautions for handling electronic devices, avoid static electricity, dampness and extreme temperatures. Please read this instruction sheet fully before use.
The Ethos 2 CPU is designed to be mounted within the main lift controller panel.
Please consult main drawings for contract specific wiring and setup.

Main CPU DIP Switches

Used to upgrade the firmware on the Lift CPU board from ".bin" file on the SD1 card. To activate the boot-loader turn on DIP C1 (SW9) and reset the Lift CPU.
(Place display card DIP's 1 and 2 on, to activate the boot-loader screen mode.
DIP C2 on only, will activate encoder test mode, used during factory testing.

Display Card DIP Switches

Used to upgrade the firmware on the display card from ".bin" file on the SD2 card. To activate the boot-loader turn on DIP 1 (SW4). To put boot-loader in screen mode for the Lift CPU turn on both DIP 1 and 2 then reset the display card.
To active the touch screen calibration utility turn on DIP 2 only, this will launch the calibration screen, follow the on screen prompts.

Specification

Supply - 24V d.c. / 0.5A (12W)
Low power shut down at 20V.
Spec - EN81-1,2 and -20,50.
Max Voltage on 110V inputs is 120V.
Max Voltage on 24V inputs is 30V.
Outputs max 120V.

Lift CPU –
2M Byte Flash, 8M RAM.
Display Card -
2M Byte Flash, 16M RAM.
7" TFT touch screen (800x480)
Mono audio.

3. MMI – Quick Start

The Ethos Two is fitted with a 7” touch screen as standard; this offers the user a comprehensive and easy to use menu system, and allows extensive built in help screens so problems can be diagnosed swiftly and accurately.

The figure overleaf gives an overview of the main MMI features; feel free to press the buttons on the touch screen to explore each feature in more depth.

3.1. MMI Key

- Fixed button that can be pressed for additional features / menus.
- Programmable button, tap to access function, touch and hold to assign a different function.
- Main navigation Buttons.
- No touch function, Information or Inactive button.
- Active Feature.

Additional help and hardware connection diagrams are available in the toolbox menu.
Some screens will require you to login – the password is set to [222222] for technician level access.

3.2. Screen Calibration

If the touch screen is behaving inaccurately, please carry out a screen calibration.

Press: Toolbox → Calibrate Screen.

Follow the on screen prompts to re-calibrate the screen.

If the touch screen isn’t working at all, turn on DIP 2 on SW4 on the MMI and reboot the MMI by pressing the reset button directly under SW4. The processor will now reboot into screen calibration mode. Follow the on screen prompts to re-calibrate the screen, turn DIP 2 off after use and reset.

Ethos Two MMI Quick Start

Screen Navigation and Info Header

The top edge of the screen will show the following:-
Current screen navigated to.
In or Out of service status.
Login notification.
Current numerical floor level. +/-/= above/below level.
(Note:- this is not floor name or legend)
Current lift direction. Time and Date.

Status Button

This bar will be green when the lift is in service with no faults active. The button will be red if a breakdown event is active or orange if in a fault condition or different operating mode to normal e.g. fire service.
Current / active events will scroll on the button.
Press the button to see / hide the status message.

Car Button

This button will show door status, travel direction and committed direction. The doors also show when the safety edge is activated, once the lock beak symbol appears the doors are closed and locked.
Press the button to go to the car info screen and common door settings. The ride sensor display button is behind this button.

Indicator & Speech Button

This button will show floor position using the floor legends. (Note:- this is floor name or legend, not numerical floor level)
Press the button to go to position indicator and speech settings.

Speed Profile Button

This button will show current speed profile of the lift car. The curve is derived from the shaft encoder device, so will be a representation of the cars current speed. The curve will be green in the up direction and red in the down direction.
Press the button to go to the velocity recording feature, profile adjust, speed and slowing settings.
Shaft encoder settings can be found here.

Help Button & Instruction / Help Footer

Press the help button for help index and main cpu connector descriptions.
The footer will show useful instructions and help information concerning the current screen shown.

Information Button

This button shows the TVC contract ID, site name and lift name or number.
Press the button for journey counters, door counters and trip counters. Rated speed and software versions can be found here.

Ethos Two – Main Screen

This guide gives an overview of the main MMI features, feel free to press the buttons on the touch screen to explore each feature in more depth.

Key:- Fixed button that can be pressed for addtioanal features / menus. Programmable button, tap to access function, touch and hold to assign a different function. Main navigation Buttons. No touch function, Information or Inactive button. Active Feature.

The event logger and settings backups are kept on the SD1 uSD card. Do not remove the SD card whilst the unit is powered up unless it is de-mounted via the toolbox menu. ***Ignoring this may corrupt the card.*** The unit will function without the card present but certain features in the logger will be limited.
To update the software or to download event logs, plug in a micro USB lead (into J16) and then use the SD1 connect button in the toolbox to put the unit in mass storage mode. This will allow the use of a PC and file explorer to drag and drop files to and from the card.
Follow the programming procedure overleaf to upgrade the firmware.
The SD2 card slot on the MMI card is normally only used for firmware upgrades. If a card is present in the slot in will automatically be placed in mass storage mode if a USB lead is plugged in.
Additional help and hardware connection diagrams are available in the toolbox menu.
Some screens will require you to login – the password is set to [222222] for technician level access.

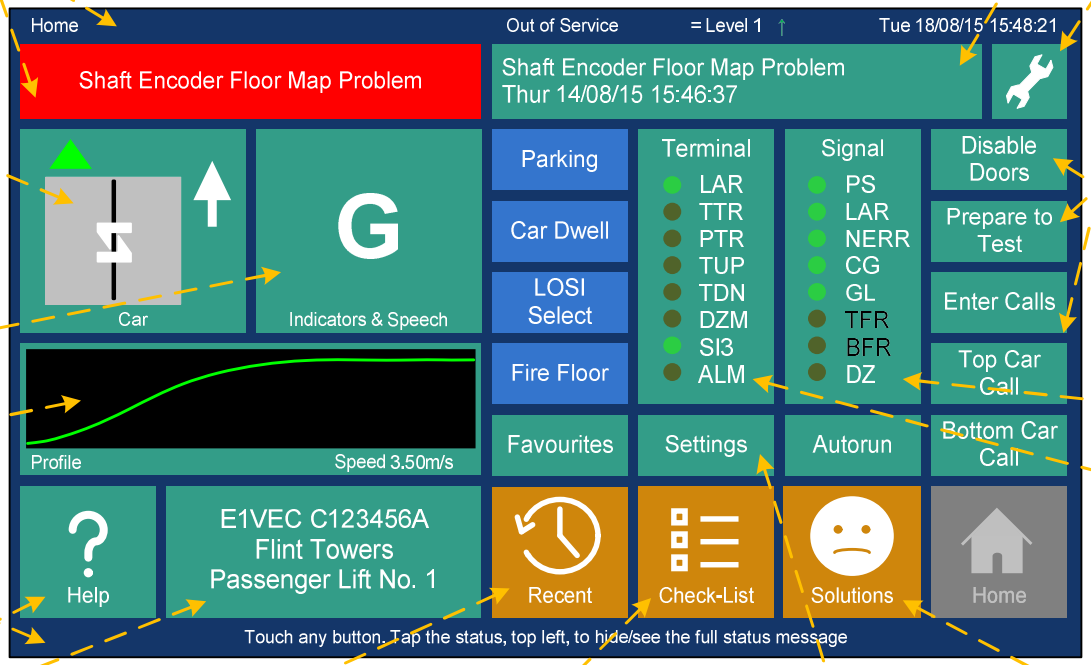

Recent and Favorites Buttons

The recent button will list recent settings that have been changed. The favourites button will take you to a list of buttons that can be assigned to commonly used settings.
The additional "Autorun" button to the right accesses the "Autorun" settings and feature activation.

Check List

The Check List gives a series of procedures to check whilst commissioning the controller / lift. Select for jog motor with direction checks, shaft learn, floor trims, ETSD testing and service activation. The panel can be put into "Hoist Mode" from here, if the car / expansion network has not been installed.

Settings Button

Select this button to take you to the settings options. Search settings list / tree contains all settings available. When changing some settings the lift has to be safe e.g. machine room stop push, pressed.
Backing up and restoring saved settings is accessed via this button. A comparison of factory and current settings can be viewed here also.

Event Logger Button

The event logger button will show events as they happen.
Press for the event logger screens, events can be filtered on breakdown / fault / service and information types. Options to search the logger by event or date are found here.
Each event will show data on the lift such as position speed etc. when the event was logged, also state of the main CPU and Car module I/O when the event occurred.

Toolbox Button

The toolbox button gives access to debug screens, comms. status screens, time date setting, screen calibration, volume and brightness control.
The built in SD card can be connected to the USB port for browsing via a PC using the Connect SD1 button.

DDS / PTT and Call Buttons

These button will place the lift in prepare to test mode to limit landing calls. Doors can be disabled and calls for the top and bottom floors can be quickly placed.
Enter Calls will take you to the call entry screen where car or landing calls can be entered on the system.

Signal Button – Trace Menu

User defined I/O for the home screen and I/O trace. Press to activate I/O trace or alter the items in the list. Logical Inputs or Outputs can be selected to be displayed on this list. Logical I/O can be mapped to any terminal on any expansion module or the main motherboard via the View I/O – configure option. Signals in black are active low / active off.

Terminal Button – View I/O

This displays a physical bank of I/O, this can be changed to any of the motherboard or expansion module physical banks.
Pressing this button will take you to the View I/O screens where you can select any expansion module or the motherboard and look at the I/O mapping and I/O status in real time. The screens also give you the status of a particular expansion module. I/O can be reassigned from here also.

Solutions Status

Select this button to take you to a list of current events / problems that are keeping the lift out of service. The face icon will be sad if there are items to be resolved.
If the face icon is smiling the lift will be ready for service.

4. Service and Feature Descriptions

4.1. Main Modes of Operation

Normal or Automatic
This is the default mode of operation signified by the LAR input to the controller (Lift Available Relay), Whenever the LAR input is de-energised, for example, due to the stop switch being operated, or the lift being switched to inspection control, all car and landing calls will be cancelled and the 'LISI' (Lift In Service) indicator will be off. (This LISI indicator is only provided when requested).

Door Disable
When enabled through the MMI, Door Disable inhibits normal operation of the door operator.
Also in this mode the lift can be moved via the MMI buttons in the "Jog Up/Down" screen, when Jog Motor mode is active.

Prepare to Test
When enabled through the MMI, Prepare to Test assists in the commissioning or maintenance by inhibiting landing calls and responding only to car calls, Doors park closed in the absence of car calls.

Inspection Control and Pit Inspection Control
When in these modes the car top / pit test buttons enable lift movement. During this time no calls will be accepted and all features such as Fire or Service control are disabled. The lift will only move if the car top inspection buttons are pressed or the pit inspection buttons are pressed (if fitted).

Emergency Electrical Operation
When in this mode the panel test buttons enable lift movement. During this time no calls will be accepted and all features such as Fire or Service control are disabled. The lift will only move if the panel test buttons are pressed. This mode is overridden by Inspection Control.

Installation Hoist Mode
When the controller is in installation hoist mode, activated in the checklist menu, the motor can be run on inspection or emergency electrical operation without the CAN2 car / expansion network plugged in. Turn off after installation.

4.2. Call Collective Modes

The Ethos Two has a selection of call collection options, see below. Some of these options require additional external modules so need to be requested at panel build time.

Full Collective
Up / Down landing calls answered in sequence, in the current direction of travel.

Down Collective
Down landing calls answered in sequence in the down direction, starting from the highest call.

Non Selective
Single call at each landing is answered irrespective of direction.

Hall Call Destination
Destination calls entered via keypad or touch screen at each landing (see TVC Navigator).

APB Control
APB operation offers the simplest form of lift service whereby the car responds to a single call and inhibits insertion of further calls whilst the lift is in use. This mode of operation is suitable only for simplex installations and is typically limited to low-rise goods lifts particularly manual gates installations. A Lift In Use Indicator (LIUI) warns other users of the temporary unavailability of the car.
APB Car Call Preference temporarily inhibits landing calls to allow car call entry by the lift occupant. The APB Car Call Preference timer restarts on arrival at a landing or when the doors open or close. The timer period can be set in the settings menu under "Calls".
The APB Last Car Call feature allows the lift occupant to change the current car call destination by pressing an alternative car push. With APB Last Car Call operation turned off the user is unable to change the car call destination once a car call has been accepted i.e. the existing car call must be serviced before another car call can be entered.

4.3. Group Operation

Press: Settings → Search Settings → Group or Parking or Peaks

The Ethos Two can be configured as a simplex or dispatcher-less group with up to 8 cars. The system can also be setup with a standalone dispatcher or HCD dispatcher (Navigator) system. Various settings for group operation are listed below:

Dispatching Overview (Non – HCD)
Put simply the dispatching algorithm employed by Ethos Two aims to assign the oldest call to the best car. Special processing routines bias the assignment of calls to close cars or cars with coincident car and landing calls. The net result is a balance between the fair distribution of lift service to all floors and an intuitive assignment of cars. Installers may adjust call preference and parking assignments for normal, up and down peak traffic. Additional priority can be given to calls at the main floor during an up peak and a Lobby Car feature may be used to keep a single car at the lobby for an extended period.
Dispatching functionality may be provided by a per car controller (dispatcher-less operation) or by a standalone dispatcher. Conceptually Ethos Two uses a master / slave dispatching model where the dispatch master assigns landing calls to all controllers in the group. The dispatch master / slave concept is applied to installations large or small. A simplex controller is always a dispatch master, a duplex installation has one dispatch master and one slave, a triplex installation has one dispatch master and two slaves and so on. Selection of the dispatch master controller is completely automatic and does not disrupt service.
Each controller's current dispatch master / slave status can be viewed by pressing the Toolbox → Group Network button. In the Group Network Status screen is a graphic showing the status of each car in the group.
The five main dispatching options available to the user for configuration are:

Parking
Parking & Bus-Stop - Parks cars at predefined levels, separate parking assignments are available for normal, up and down peak traffic. Bus-Stop service provides rudimentary lift service during landing riser failure.
Ethos Two provides discrete parking assignments for normal, up and down peak traffic conditions. For each of the three traffic conditions an ON / OFF control, parking timer and parking assignment table has been provided.
Parking ON/OFF - Select ON to park idle cars or OFF to leave idle cars at their current floor level (default = ON).
Parking Timer - The Parking Timer determines the period of time in seconds between the car becoming idle and assignment of the parking call (default = 10 seconds).
Parking Assignments - The Parking Assignments screen lists a table of parking levels in ascending order of priority i.e. the first idle car will park at the level entered for Park Assign Index 1 the second idle car will park at the level entered for Park Assign Index 2 and so on.
The floor entry for Park Assign 1 is also known as the Primary Parking Assignment, it receives a higher level of coverage than the other parking assignments. A car parked at any of the other parking assignment levels can be moved to the Primary Parking Assignment level if it becomes unoccupied. A car parked at the Primary Parking Assignment level will not be re-homed to any other parking level.

The parking assignment table is scanned for non-zero entries from Park Assign-1 through to Park Assign-8. A value of zero is ignored if there are fewer non-zero entries than the number of cars in service the number of cars allowed to park is reduced to the number of non-zero Park Assign-levels.

By way of example the following configuration for a 5 car group assigns the first 3 idle cars to levels 1-3-5, the 4th and 5th idle cars will not receive a parking assignment whilst the parking levels 1-3-5 are occupied:

Park Assign-1	1	(Primary Parking Assignment)
Park Assign-2	3	
Park Assign-3	5	
Park Assign-4	0	
Park Assign-5	0	

The Primary Parking Assignment (Park Assign-1) also specifies the Lobby Floor (see Lobby Floor below). The parking assignment levels are unique to each site and should be adjusted as necessary by the installer.

Peaks
The Ethos Two has special call processing routines for up and down peak traffic. By selectively "aging" landing calls preference can be given to a particular direction of landing call (also known as boosting).
During an up peak idle cars can be made to park at specified up peak parking levels (refer to earlier section on parking) plus landing calls at the lobby and up landing calls at all floors can be boosted.

During a down peak idle cars can be made to park at specified down peak parking levels (refer to earlier section on parking) and down landing calls at all floors can be boosted.
By default, peaks are disabled and must be enabled by the installer once site traffic conditions have been assessed.
A full description of all parameters relating to peak processing follows.
Peak Invocation - Peak processing is invoked by one of three triggers:

1. Input activation, peak processing begins on activation of the relevant input (refer to job specific wiring diagrams) and persists until the input is deactivated.
2. Timer activation, peak processing starts and ends at user definable times.
3. Automatic activation, peaks begin when the appropriate start conditions have been met and persist for the duration of the peak traffic condition or at least as long as the user definable peak duration time.

Peak Prioritisation - When up and down peaks coincide activation adheres to the following sequence (highest to lowest):

- Input activated down peak
- Input activated up peak
- Timer controlled down peak
- Timer controlled up peak
- Automatic down peak
- Automatic up peak

Up Peak
Defines the up peak traffic start conditions, choose between input, time clock or automatic initiation. Provides a boost for calls at the main floor during up peak traffic.
Inputs: "UPK ", "Up Peak Input"

Down Peak
Defines the down peak traffic start conditions; choose between input, time clock or automatic initiation.
Inputs: "DPK ", "Down Peak Input"

Group → Lobby Service
Delays cars leaving the lobby floor to encourage higher occupancy.

Group → Floor Preference Boost
Provides user settable boosting of calls at individual floors.

On delivery to site, controllers are pre-set with default settings. The default settings provide a good level of service for a wide variety of conditions however; Installers may choose to configure the dispatching features for optimum performance on each site.

Step By Step Guide To Dispatcher Configuration
The following guide is an optional series of steps that may be followed by the installer to tune group performance. Peak configuration should be performed with all cars in service. Knowledge of traffic patterns and building population is a prerequisite to dispatcher tuning. An Ethos Two group that is not tuned on site will still provide good service. Incorrect configuration may produce a serious reduction in group performance.
Step 1. Check normal homing levels have been defined appropriately and homing is enabled. A homing time of 10 seconds is typical.
Step 2. Define parking levels for up and down peak traffic. If peak parking levels are not required, ensure the peak parking assignments are set to the same levels defined in the normal parking assignment table.
Step 3. Depending upon which peak activation trigger is used (input, timer or automatic) set peak timers or automatic detection parameters as required.
The active peak mode is displayed on the Ethos Two main status display. Events are stored in the event log to mark the start and end of each peak. If automatic peak detection is required, use the following guidelines.
For automatic up peak activation start out by increasing Max Down Calls and reducing Min Car Calls and Min Loaded Cars from their default values. By monitoring the number, duration and time of up peak events in the event log optimal sensitivity of the system can be obtained. Similarly, for automatic down peak activation Max Up Calls should be increased and Min Down Calls reduced from the default settings until the required sensitivity has been reached.
Be conservative with Up and Down peak weighting. It is recommended that these parameters be left set at the default value of zero. Even moderate values can lead to an increase in the number and duration of long wait times for reverse traffic flow.
Step 4. For ad hoc boosting of specific floors, use Floor Preference. Set Floor Preference back to zero when boosting is no longer required.
Step 5. Use Lobby Service to increase utilisation of cars at the lobby if necessary.
Note that whilst parked at the lobby level the lobby car will not be assigned landing calls from other levels.

4.4. Door Settings

Press: Car → Settings or Settings → Search Settings → Door

The key door settings can be found behind the Car button and in the Search Settings menu. Ethos Two can be configured for all major door operators, manual gates and swing landing operation. Any combination of front and rear door openings can be requested. Each door parameter gives a description of its use and units.

Door Dwell
Dwell timers dictate the time the doors stay open when answering car, landing or combined calls.

Door Operation
Operation parameters such as whether advanced door opening or nudging is active can be found here. Delay timers for reversal and contactor operation are also located here.

Door Protection
Door protection timers for opening and closing cycles can be adjusted as well as gate open warning timers for manual gates and safety edge timeout timers.

4.5. Indicator Settings

Press: Indicators & Speech or Settings → Search Settings → Indicators & Speech

All indicator and speech unit settings can be found behind the Indicator and Speech button and in the Search Settings menu. Ethos Two can be configured to serially control several 3rd party manufacturers' encoder units, as well as control encoders that are discretely wired. Binary / Gray code and discrete position indicators can be controlled. The flexible I/O available can cover anything from hall lanterns to BMS signals. Options for indicator testing are also under this menu. Each indicator parameter gives a description of its use and units.

Base Indicator Settings
This menu contains basic indicator setup parameters, such as whether the PI/BI outputs are used and any binary offset. Serial indicator communications modes etc.

Lanterns and Gongs
Settings for hall Lanterns and Gongs are under this heading. The Gong test feature can be activated here also.

Lift In Service
The indicators can be setup to show Lift In Service – LISI or Lift Out Of Service – LOSI. Some features can be setup to active the lift in service indicator or not e.g. Inspection control activates LOSI.

Serial Speech Msg. Enable
Numerous speech messages can be activated or silenced depending on configuration here. For example: whether the indicators show if the alarm button has been pressed.

Speech Hush Times
This time window start/finish determines when the speech unit volume is turned down, normally during the night.

Speech/Gong Triggers
There are various options for triggering the floor arrival speech messages. For traction lifts using the integrated speed pattern the message can be announced on the estimated time of arrival to floor. For other setups e.g. hydraulic lifts the trigger can be delayed dependant on single / multi floors journeys. Gong delay and trigger pulse duration can be adjusted here.

4.6. Optional Service and Feature Descriptions

The Ethos Two has a multitude of standard methods of control built in, the feature list below gives a brief description of the main services and features. Some of these features require additional external circuitry so need to be requested at panel build time.

Access to the feature settings can be found behind the MMI “Settings” button.

Press: Settings → Search Settings → Services / Features

Accelerometer
The 3 axis accelerometer mounted on the Car Module board can be used to report abnormal stops or an “Over G” event.

Anti-Nuisance Control
Monitors the lift use to determine if inappropriate call inputs are being set.

Auto Recovery
If the controller senses a fault and has tried 3 times to start a journey or door cycle it will go out of service, the auto recovery feature extends the number of attempts to move.

Auto Run / Burn In Test
Auto Run can be used to test the lift for up to 24 hours before it’s entered into service, in this mode car calls will be entered automatically, this feature can be used with or without door disable.

Bus Stop / Dispatch Failure
If the controller cannot accept landing calls due to a group bus fault or landing push feed fault it will go on to bus stop mode to allow a limited service.

Cabinet Fan
Limits the cabinet fan to between certain hours if needed.
Outputs: "CFAN ", "Cabinet Fan"

Car light Control
Car light control used to turn off the lift car’s fan and light when the lift is not in use.
Outputs: "CLT ", "Car Light Output"

Eco Mode
Programmable by time of day, with staged count down timers, when active.
Any ‘Wake-up’ signal will cancel Eco-Mode and return the lift to normal service.
Wake-up signals include car or landing calls, special service, fire control, inspection operation and touch screen activation. Stage 1 (Snooze) after an adjustable period of inactivity. The car light and fan will be switched off. Stage 2 (Sleep) after a second period of inactivity. Shutdown drive and unneeded control circuitry, turn off unnecessary LEDs and backlights. Stage 3 (Hibernate) after a third period of inactivity. Shutdown indicators, speech, call button dual-illumination and other peripherals.
During activated Eco-Mode periods, the controller will select the “Low Energy” ride profile, this is used if calls are below an adjustable level or the lift is on a homing run or other non-critical journey. Low Energy mode is deactivated if multiple calls above the call limit are accepted.
Outputs: "EC1 ", "Eco Mode Stage 1" + "EC2 ", "Eco Mode Stage 2"

Emergency Power
On ESUP input activation: -
Puts all cars in emergency power mode, so they stop at next floor and wait for next command. Lifts will display Emergency Power in the Mode entry on the status screen.
If the car does not have the duty flag, it will additionally display No duty Car as a fault in the status button.
Dispatcher then selects Duty Car: -
If dispatcher sets “duty car” across the network then we follow the next three inputs or flags from dispatcher. The dispatcher gives duty to a car; this would then return to either the fire floor or the emergency return floor if FSR, FAM or EMR are active. If not the dispatcher will request a recovery to the emergency supply return floor. The recover flag from dispatcher causes the car to return to emergency supply floor only if duty car. FAM or FSR would also return to fire floor only if duty car. EMR would return car to emergency floor if duty car.
FSR (Firefighting) phase 2: -

If a car is already on fire phase 2 when ESUP is activated then this is automatically the duty car and will stay that way.
When all cars are returned to their relevant floors or have been found to have stalled 3 times the fire duty car will become Duty Car if it has not stalled.
Inputs: "ESUP ", "Emergency Supply"

Emergency Recall
Emergency recall takes the lift out of normal service and parks the lift at its recall floor. Three emergency recall inputs provide recall to specified recall floors.
Inputs: "EMR1 ", "Emergency Recall 1" + "EMR2 ", "Emergency Recall 2" + "EMR3 ", "Emergency Recall 3"

Engineers Access
When activated Engineers Access Control will take the lift to a point in the shaft at levelling speed and then stop to allow the lift engineer to easily gain access to the car top.
Inputs: "EAC ", "Engineer's Access Ctrl Ip" + "EAS ", "Eng's Access Stop Input"

Fire Recall
The lift will operate as EN81-73 describes: - Once initiated the lift will travel to the fire floor as soon as possible. If the doors are open they will nudge closed, if available. Note: the door open push and the safety edge will be ignored. If the lift is travelling in the wrong direction, it will stop at the next available floor and without opening its doors return to the fire floor. When at the fire floor the doors will open and remain open. (They may be set to dwell closed in customer settings). No car or landing calls can be entered. Throughout this service the FRI (Fire Recall Indicator) output will be active.
Inputs: "FAM ", "Fire Alarm Recall"

Fire Service (Firefighting)
The lift will operate as EN81-72 describes: - Operation of a single pole Fire Control Switch installed on the main landing will immediately initiate Phase 1 Fire Control Return.
Phase 1 Fire Control, the lift will return to the fire floor as quickly as possible. The following sequence of operations will occur: -
All calls will be cancelled. If the lift is travelling away from the fire floor, the car will slow and stop at the next available landing, the doors will remain closed and following a short delay the lift will start to return to the fire floor.
If the lift is travelling towards the fire floor, the lift will continue to the fire floor without interruption.
If the lift is at a landing with its doors open, the doors will nudge close immediately if available and the lift will proceed to the fire floor, the door open push will remain operative in this phase.
Throughout the Fire Service Control sequence the "Fire Control" FCI indicator will be illuminated, landing calls will remain inoperative and the Safety Edge (or the heat sensitive door devices) will be disabled.
Once at the fire floor the firefighting lift will park with its doors open and Phase 2 Fire Service operation will begin.

Phase 2 Fire Service, the following operations will exist on the firefighting lift:
Once they are fully closed, the doors will only open via constant pressure on the door open push. If the push is released before the doors have fully opened they will automatically close. Once the doors are fully open they will remain open until constant pressure of a call push causes them to close. If the call push is released before doors are fully closed, the doors will re-open, all calls be cancelled and the lift will park with its doors open until a car push is re-operated. The safety edge will be disabled.
Once the lift is moving, only one call will be accepted at any point, a new call entered will cause the original call to be cancelled, the lift will travel to the last call entered. If moving away from the floor the lift will stop and reverse direction. Once at the selected floor the doors will remain closed until signalled to open by constant pressure operation of the door open push.
The lift will only return to normal operation if the fire control switch is in its 'Off' position, the lift is at the fire floor and the doors are fully open.
Switching the fire control switch 'Off' for a minimum of five seconds and then to 'On' again, at any time, will always cause the lift to return to the fire floor. Unless fitted with an in car fire switch, this switch must be on for the lift to move whilst in phase 2.
Inputs: "FSR ", "Fire Service" + "FCS ", "Fire Car Switch"

Hospital Service
On entering a Hospital call the dispatching function will determine which lift will go on to Hospital service, all other lifts in the group will stay on normal service. Only lifts capable of performing the service will be available. If a lift has a fault, is on a higher priority service or is overloaded, then it is unavailable. A Hospital call cannot be placed at a blank floor.

The lift on hospital service will cancel all its car calls and landing calls, and temporarily remove any floor security in place. The lift will then travel to the floor the hospital call has been placed, if the doors are currently open then it will close them directly using nudging (if available), DOP to be ignored.
On arriving at the recall floor, the lift will open its doors and wait for a constant pressure car call to be placed onto the lift. The doors will close and the lift will service the call. If no call is placed the service will time out and the lift will return to normal service. On arriving at the selected floor, the lift will return to normal service.
If at any stage the lift develops a fault condition then it will cancel Hospital service.

Lift Alert Monitor
Prevents the lift starting a new journey if the system detects unintended movement.
Inputs: "MLA ", "Lift Alert Monitor"

Lift Isolation
Lift isolation takes the lift out of normal service, parking it at the next available floor.
Inputs: "LISL ", "Lift Isolated"

Limited Floor Service
Limited floor service provides an extra security map that is activated via an input, the real time clock, or both.
Inputs: "LTD ", "Limited Service"

LISI Self-Test
Allows the lift to put calls on so that the lift status is checked. Only active if [Self-Test Enable] is set and time is within [LISI Daytime Start] and [LISI Daytime Finish].
Once active waits until car has been idle for [Test Delay Timer] time. Then the processor will place a call and the lift will run to floor. Homing does not operate while in self-test mode.
Lift will then return to original floor after [Test Delay Timer] time. This will continue for [Max Number of Tests].

Load Weighing / 95% Load
Lift is on 95% Bypass and will not accept any more landing calls. If the car is fitted with a load sensing switch and this switch is closed when the doors are closing, then the by-pass feature operates so that the car cannot stop for intermediate landing calls and will only stop at the first car call encountered. Acceleration or retardation cannot cause inadvertent operation of the by-pass feature.
Inputs: "WS95 ", "95pc weight switch"

Load Weighing / 110% Overload
Where the input WS110 is active the MPU will record the event, cause the doors to re-open and refuse to close until the load is reduced. The event will remain displayed while this situation continues to exist, also the OLI output (Car Overload Indicator) will be turned on. (Not active on Car Top Inspection Control).
Inputs: "WS11 ", "110pc weight switch"

Lobby Return
When on Lobby Return, all landing calls are cancelled and the entry of further car and landing calls is inhibited, but existing car calls remain active. When the existing car calls are answered, the lift will then return to the predefined Lobby Return Level where it will park out of service.
Inputs: "LRET ", "Lobby Return"

Low Pressure Return (if input assigned)
Available on hydraulic lifts, if the low pressure input is activated the car will recall to the lowest floor and shutdown.
Inputs: "LPI ", "Low Pressure Input"

Milkman's Service
Milkman's service takes the lift out of normal service and places control to a driver of the car. The driver places single car calls to drive the lift to its required destination. Upon arrival at the destination, the lift will park open until either the Cancel Milkman's Service Timer expires or entry of a further call. The Cancel Milkman's Service Timer will start as soon as the milkman's input is active. Should the timer expire or the input is present for a second time, the lift will return to normal service.
Inputs: "MILK ", "Milkman's Service"

Remote Recall
Remote recall takes the lift out of normal service and parks the lift at its recall floor. It is control by TVC's E-Director system. E-Director provides a method of monitoring and controlling a lift from a PC.

Service Activation
Service activation allows the lift installer/tester to place the lift on a choice of services replicating the physically switching of that service. The service will be activate until the function is turned off and is logically in parallel with the physical motherboard input.

Special Service
Special service takes the lift out of normal service and places control to a driver of the car. The driver places single car calls to drive the lift to its required destination.
Inputs: "SSR ", "Special Service"

Remote Isolation
Remote Isolation takes the lift out of normal service, parking it at the next available floor. It is controlled by TVC's EMU system. EMU provides a method of remote monitoring any lift controller.

UPS Recall / UPS Shutdown
Depending on options selected the lift will stop at the next floor and shutdown or proceed to the fire floor at UPS speed and shutdown.
Inputs: "UPS ", "UPS Evacuation Mode" + "ULB ", "UPS Low Battery"

Urine Detection
Urine detection is a feature that detects the presence of urine and brings the lift to a recall floor. Typically used on railway station lifts.
Inputs: "UDI ", "Urine Detection Input"

Winter Auto Run
Winter auto run places a top floor call on to the lift every 30 minutes that the lift has been idle. The lift will then dormant park to the bottom level. Used on Hydraulic drive lifts to ensure that the oil stays warm.

4.7. Checking Feature Descriptions

The Ethos Two has a multitude of monitoring methods built in. The feature list below gives a brief description of the main checking features. Some of these features require additional external circuitry so need to be requested at panel build time.

Access to the checking feature settings can be found behind the MMI "Settings" button.

Press: Settings → Search Settings → Checking Features

Final Limit Monitor
This activates an input that monitors the final limit, once tripped the lift will shut down and not move until the input is restored and the event reset in the solutions menu. On hydraulic lifts the lift will park at the bottom floor and shut down. (Required by EN81-20)
Inputs: "TFL ", "Top Final Limit"

Safety Gear Monitor
This activates an input that monitors the safety gear switch, once tripped the lift will shut down and not move until the input is restored and the event reset in the solutions menu. (Required by EN81-20)
Inputs: "SGS ", "Safety Gear Switch"

Over-speed Governor Monitor
This activates an input that monitors the over–speed governor switch, once tripped the lift will shut down and not move until the input is restored and the event reset in the solutions menu. (Required by EN81-20)
Inputs: "OS ", "Over Speed Input"

Lock Bypass
EN81-20 requires a Landing and Car Door Bypass device for maintenance on landing door, car door and door locking contacts. During this operation the movement of the car shall only be possible in inspection operation or emergency electrical operation. An audible signal on the car and a flashing light under the car are activated during movement. When the lift is moving in inspection operation or emergency electrical operation the LBPI output will strobe at 2 second intervals.
Inputs: "LBP ", "Lock Bypass Monitor" and Outputs: "LBPI ", "Lock Bypass Indicator"

Rope Brake Monitor
This activates an input that monitors the rope brake, once tripped the lift will shut down and not move until the input is restored and the event reset in the solutions menu.
Inputs: "RBM ", "Rope Brake Monitor"

Test Up Limit Monitor
This feature checks the test up limit on normal when at the top floor, if the limit is not seen, the controller will not allow movement on inspection or emergency electrical operation. This event can be reset in the solutions menu, only when on inspection or emergency electrical operation.
Inputs: "TUL ", "Test Up Limit"

4.8. Motion Feature Checks

Depending on the lift type the following features can be enabled, these features require additional external circuitry so need to be requested at panel build time.

Press: Settings → Search Settings → Brake → Brake Lift Confirm

Brake Lift Confirm
Brake lift confirmation checks that the brake operation is correct during a lift journey by monitoring a confirmation output from the brake.
Inputs: "BLC1 ", "Brake Lift Confirm 1" + "BLC2 ", "Brake Lift Confirm 2" + "BLC3 ", "Brake Lift Confirm 3"

Press: Settings → Search Settings → Valve Checking

Dual Valve Test
Dual Valve Test performs a once daily check that the lift does not move if only one valve is active on a dual valve setup. The lift is first returned to the lowest floor then tested. If the lift does move, during the test, the lift will be shutdown. This event can be reset in the solutions menu.
Outputs: "VR1 ", " Valve Release Output 1" + "VR2 ", " Valve Release Output 2"

Valve Test
Valve test confirmation checks that the hydraulic valve operation is correct during a lift journey by monitoring a confirmation output from the valve block.
Inputs: "VC1 ", "Valve Confirmation Ip 1" + "VC2 ", "Valve Confirmation Ip 2"

iCON SMA Valve Test
iCON valve test confirmation checks that the hydraulic valve operation is correct during a lift journey by monitoring a confirmation output from the valve block.
Inputs: "SMA ", "iCON SMA Monitor Input"

5. Solutions and Event Logger

5.1. Solutions

The solutions button gives an instant notification of the lift having a current problem that is restricting service.

Press: Solutions

Happy – In service. If no current breakdown events are active the solutions button will show the happy face icon.

Sad – Out of service. The controller has an active breakdown event or is in test / inspection mode.

Within the solutions screen you will find a list of events that are stopping the lift running. If multiple events are present these can be scrolled through, each event is shown with its description. A button is available on each event to jump to the point in the Event Logger where the event occurred. Some events may require a manual reset this can be done from within this screen. A snapshot event can be logged to capture the current lift status for further examination at a later date.

5.2. Event Logger

Ethos Two can record over 250 different events that will give detail on problems encountered with the lift.

The logger will display up to 500 events, older events are archived on the built in SD card that can accessed via the USB connection.

Events are categorised into 4 types:

	[Breakdown]	Red – Breakdown / major fault that is stopping the lift from working.
	[Fault]	Orange – Faults are problems that are logged but may not take the lift out of service.
	[Service]	Magenta – Typically service event e.g. the lift is on fire service.
	[Information]	Blue – General information events, e.g. when the lift is parking etc.

For each event the logger will record, position, speed, direction, state of IO etc. Pressing an event in the event list shows the detailed information that was captured at the time of the event. Once in this detailed level, the I/O at the time of the event can be seen. More detail on a particular event can be found via the Help button.

Press the timeline button to show graphically when the lift was in and out of service for a particular day.

The next section is a list of event codes with a description of each event. Each event code has a group which specifies the particular area the code is related to e.g. Doors or Motion. Events can be Double Sided or single Sided

Double Sided Events (DBL)
Conditions that persist over a reasonable period generate two logger entries. An initial “assert” entry logged when initial conditions are met and a secondary “restore” entry is logged when the condition ends e.g. “Fire Service” (assert), “Off Fire Service” (restore).
A double-sided event is current (or active) from the moment of assertion up until the event is restored or the processor is reset. On power up all double sided events return to their inactive unasserted state i.e. double sided events do not persist through processor resets.
The View Events and select Active Events lists double sided events that are currently asserted and awaiting restoration. It can often offer an indication as to why the lift is not responding to car or landing calls.

Manually Resettable Events (MAN)
Same as double sided events but additionally these events need to be reset in the “Solutions” menu by a competent person. These events are the most serious and an investigation in to what caused the problem needs to be carried out before the lift is returned to service.

Single Sided Events (SGL)
Single sided events have no duration and are logged as asserts e.g. “#11 Engineers Event” (assert).

5.3. I/O Trace

Ethos Two contains a powerful I/O trace facility to track down intermittent faults.

Press: I/O Trace

The I/O Trace screen can be setup to keep a record of 50 I/O transitions for up to 8 Inputs or Outputs. Use the Signal button to select I/O that is of interest. Once the I/O has been selected the I/O Trace can be set to be triggered manually or to stop capture when a particular event occurs.
Once triggered, the I/O can be graphically stepped through transition by transition. This gives a powerful way of tracking down an intermittent input e.g. lock tip or worn contact that is periodically giving the lift problems.

6. List of Events

Event Code	Group	Type	Event Text

Code-001 CONTROL DBL Lost LAR / Normal (LAR).
Whenever the LAR Relay is de-energised due to the stop switch being operated or the lift being switched on to test control this event will be displayed. Otherwise check the safety circuit.
[Breakdown]

Code-002 CONTROL SGL ***Watchdog Reset*.**
A CPU software or hardware problem has occurred. This indicates that the MPU was unable to function properly through part of the lift program, such that it gets stuck and nothing else gets done. After a short delay, the Loop Flag Monitor will deliberately reset the MPU. The MPU will again enter its reset routine, record the event and re-enter the lift program.
[Fault]

Code-003 MOTION DBL Not In Door Zone / Stopped in Door Zone OK.
The lift stopped out of door zone, check other events preceding this one to identify reason for stopping outside door zone.
[Fault]

Code-004 DOORS SGL Front Door Open Protection Timeout.
The timer protecting the front doors during the opening phase has expired. Check for door obstructions, door track problems. Check door limits are working correctly.
[Fault]

Code-005 MOTION SGL GL Lost Whilst Stopped.
Gate Lock input has been lost whilst lift in stopped state with doors closed, please check lock circuit / door contacts etc.
[Fault]

Code-006 MOTION SGL GL, CG or LGC Lost On High Speed.
Gate Lock, Car Gate or Landing Gate Contact has been lost on High or Medium Speed, check lock circuits and skates etc. at floor indicated by event details.
[Fault]

Code-007 MOTION SGL GL Or CG Lost On Low Speed.
Gate Lock, Car Gate or Landing Gate input was lost on Low Speed or Slowing, check lock circuit and skates etc. at floor indicated by event.
[Fault]

Code-008 DOORS SGL Pre Lock Fail.
The lift is in the door zone, but unable to move in response to a call because of lock failure. The event will be recorded and the lift will re-open its doors in order to make another attempt to close and make up the gate lock. After three unsuccessful attempts to close, the lift will then park with its doors open. And a Multi Pre Lock fail event (code 95) will be issued.
[Fault]

Code-009 DOORS SGL Front Door Close Protection Timeout.
Doors have failed to close if there are calls present, the lift will reverse the doors. Two further attempts are made to close each time a code 009 will be produced. If the doors fail to close on the third attempt, a code 110 will be produced. The doors will reverse and park open and all calls will be cancelled. This fault can be caused by an obstruction in the door track, problems with the door limits or person preventing the doors from closing
[Fault]

Code-010 SERVICES DBL 110% Overload / 110% Clear.
When the WS110 input is made the lift will record this event, the doors will remain open and not close until the load is reduced. The event will remain displayed while this situation continues to exist, the OLI output (Car Overload Indicator) will be made. (Not active on Car Top Test Control).
[Information]

Code-011 CONTROL SGL Engineers Event Set.
Engineers Event Set has been selected within the options menu by the user.
[Information]

Code-012 CONTROL DBL Car Delayed - Calls Transferred / Car Available for Calls.
Landing calls have been transferred (in group system) or cancelled because the car was delayed. Check for motion or door related faults. Can be caused by passengers delaying the lift from starting its journey
[Breakdown]

Code-013 MOTION SGL Bottom Floor Reset.
Bottom Floor Reset has occurred - ignore if diving. On arrival at the bottom terminal floor, the lift has reset its lift position as it does not correspond with that of the bottom floor, indicating that the lift was out of step. It is important that the stepping signal is encountered before the terminal reset signal to avoid false events being recorded.
[Fault]

Code-014 DRIVE DBL Multi Start Fail / Multi Start OK.
More than 3 accumulated start fails have occurred, all car calls will be cancelled, hall calls released, the 'LSI' indicator cancelled, and the event recorded. The lift doors will park open and will only close again if a car or a hall call is operated. If another code 014 is again generated, following a further three unsuccessful attempts to start, the doors will again park open, but will only respond to car calls.
[Breakdown]

Code-015 DOORS SGL Front Door Nudging.
Provided that there are calls present, limited force door closing will come into operation if the doors are held open for over 25 seconds by safety edge or if there have been a set number of door reversals caused by the safety edge etc. A buzzer will sound in the lift car, and the doors will close under limited force disregarding safety edge operation. (The door open push is still effective in reversing and holding open the doors, but the doors will start closing immediately once the door open push is released).
[Information]

Code-016 MEMORY SGL SRAM Test Failure.
The SRAM Test Function has returned an error during CPU initialise, report this error!
[Fault]

Code-017 CONTROL SGL CPU 24V Power OK.
CPU 24V power has recovered, check supply to main CPU, user data shows time the power has been absent (50mS units).
[Fault]

Code-018 SERVICES DBL Self-Test Failure / Self-Test OK.
if enabled and after a timed period of idleness the lift will test itself by going to an adjacent floor and returning, If the sequence of events does not occur within defined time limits, the 'LSI' is cancelled. Another attempt is made after a further timed period of idleness for confirmation. If all is well, no further attempts will be made. If another failure occurs the event is recorded, the doors will park open, and the lift will only try to respond to car calls. Check user data/event log for supplementary information.
[Fault]

Code-019 CONTROL MAN Over Speed Governor Operated / Over Speed Gov. OK.
The Over Speed Governor has operated. Possible causes are lift over speed or uncontrolled movement.
[Breakdown]

Code-020 DOORS SGL Front Safety Edge Overtime.
If the lift doors are held open by continuous operation of the safety edge for more than 20 seconds, the event is recorded. Check door for obstructions / SE operation.
[Information]

Code-021 DRIVE SGL Drive Start Fail.
Drive failed to complete start sequence within 3 seconds. The MPU has signalled for the lift to start and the lift has not done so. After a short delay, the lift doors will re-open and the event is recorded, check drive safety.
[Fault]

Code-022 CONTROL SGL Events Archived.
The event log files on SD1 have been archived.
[Information]

Code-023 CONTROL SGL Logger Corrupt.
The software has reset the event logger because it was found to be corrupt following a system reset.
[Fault]

Code-024 CONTROL DBL Shaft Encoder Count Test Mode / Shaft Encoder Count Normal Mode.
The Shaft Encoder is using simulator count resolution values, do not let the panel leave the factory in this mode. Move SW9-C2 to it's off position.
[Fault]

Code-025 MOTION SGL Top Floor Reset.
Top Floor Reset has been detected, Check proximity switches, shaft positioning device, Ignore if diving.
[Fault]

Code-026 SERVICES DBL Lost Car Push Feed / Car Push Feed OK.
Car push feed input is missing check fuses & connections. Lift may be in bus stop mode.
[Breakdown]

Code-027 SERVICES DBL Lost Land Push Feed / Land Push Feed OK.
Landing push feed is missing check fuses & connections. Lift may be in bus stop mode.
[Breakdown]

Code-028 MOTION DBL Reset Limit Error / Reset Limits OK.
Both reset limits are present, check wiring and inverted reset flag in parameters.
[Breakdown]

Code-029 SERVICES DBL Emergency Supply / Emergency Supply OK.
Lift is on Emergency Supply, check building mains.
[Service]

Code-030 MEMORY SGL Parameters Defaulted.
User and backup parameters have been successfully reset to their default state
[Information]

Code-031 DOORS MAN Gate Locks Bridged / Gate Locks OK.
Gate locks shorted. Check locks, safety, re-levelling, advance door opening circuits for shorts. Press reset button to clear when checks have cleared
[Breakdown]

Code-032 MOTION SGL GL Lost Re-Level.
GL lost whilst on re-levelling, check lock circuit / skates etc.
[Fault]

Code-033 MOTION DBL LTLR Tripped / LTLR OK.
If during the slowing cycle the lift has taken an excessive time to obtain floor level the MPU will cause the direction to be lost, thus stopping the lift. If the event is recorded 3 times the lift can only be reset by a car call. If nuisance tripping occurs check value of LTLR timer setting.
[Fault]

Code-034 MOTION SGL Stuck Leveller.
Leveller or DZ stuck on high or medium speed, check shaft vanes etc.
[Fault]

Code-035 DRIVE DBL NERR Lost / NERR OK.
NERR input lost, could be drive error, check drive settings, encoder feedback signals, shaft encoder faults and overloads.
[Breakdown]

Code-036 CONTROL SGL Stuck Car Push.
A car call input has been kept on longer than acceptable. Check push / wiring for short circuits or stuck contacts. User data in the event detail will give floor number for push.
[Fault]

Code-037 CONTROL SGL Stuck Down Push..
A down call input has been kept on longer than acceptable. Check push / wiring for short circuits or stuck contacts. User data in the event detail will give floor number for push.
[Fault]

Code-038 CONTROL SGL Stuck Up Push..
A up call input has been kept on longer than acceptable. Check push / wiring for short circuits or stuck contacts. User data in the event detail will give floor number for push.
[Fault]

Code-039 CONTROL SGL Stuck Rear Car Push..
A rear car call input has been on longer than the stuck push timer. Check push / wiring for short circuits or stuck contacts. User data in the event detail will give floor number for push.
[Fault]

Code-040 CONTROL SGL Stuck Rear Down Push..
A rear down call input has been on longer than the stuck push timer. Check push / wiring for short circuits or stuck contacts. User data in the event detail will give floor number for push.
[Fault]

Code-041 CONTROL SGL Stuck Rear Up Push..
A rear up call input has been on longer than the stuck push timer. Check push / wiring for short circuits or stuck contacts. User data in the event detail will give floor number for push.
[Fault]

Code-042 SERVICES DBL On Inspection Control / Off Inspection Control.
Indicates that the control system is in Car Top Inspection Control. During this time no calls will be accepted and all features such as Fire or Service control are disabled.
[Service]

Code-043 DOORS SGL Rear Safety Edge Overtime.
Rear Safety Edge overtime, Check door for obstruction / SE operation.
[Information]

Code-044 DOORS SGL Rear Door Open Protection Timeout.
Rear Door Open Protection Timeout, Check for door obstructions, Door Tracks, Check door limits / door operation.
[Fault]

Code-045 DOORS SGL Rear Door Nudging.
Rear Door Nudging, Check safety edge (SE), Check for door obstruction.
[Information]

Code-046 MOTION DBL Seek Next Floor Down / Seek Floor Down Found.
The lift is moving to the next floor, in the down direction.
[Information]

Code-047 MOTION DBL Diving Down / Dive Found BFR or Dive End.
Diving Down, The position from the shaft encoder has been lost, or an error in the shaft positioning equipment.
[Information]

Code-048 MOTION DBL Shaft Encoder Abs Comms Fail / Shaft Encoder Abs Comms OK.
Communications lost with absolute position encoder, check looms and shaft encoder power / fuses.
[Breakdown]

Code-049 DOORS SGL Rear Door Close Protection Timeout.
Rear Door Close Protection Timeout, Check for door obstructions, Door Tracks, Check door limits / locks / door operation.
[Fault]

Code-050 MOTION DBL Diving Up / Dive Found TFR or Dive End.
Diving Up, The position from the shaft encoder has been lost, or an error in the shaft positioning equipment.
[Information]

Code-051 MOTION SGL Stopped Off Level.
The car has stopped out of floor level. Check drive/valve stopping setup and/or brake, check slowing for overshoot.
[Fault]

Code-052 DRIVE SGL Parking Failed.
Lift failed to park at the bottom floor. Check for associated faults in logger.
[Fault]

Code-053 CONTROL SGL Stuck Push Cleared..
A stuck push has been cleared.
[Fault]

Code-054 CONTROL DBL On Up Peak Duty / Off Up Peak Duty.
Lift in up peak duty traffic mode.
[Information]

Code-055 SERVICES DBL Lobby Return / Off Lobby Return.
Lift on Lobby Return Service.
[Service]

Code-056 CONTROL DBL On Down Peak Duty / Off Down Peak Duty.
Lift in down peak duty traffic mode.
[Information]

Code-057 SERVICES DBL Hospital Service / Off Hospital Service.
Lift is on Hospital Service.
[Service]

Code-058 MOTION DBL Re-Level Start / Re-Level Stopped.
The lift is on a re-level journey, this event is for information only.
[Information]

Code-059 MOTION SGL Zero/Adv Brake Problem.
Zero hold or Advance brake lift general fault, check operation sequence and GL or LGC.
[Fault]

Code-060 DOORS DBL Advance Brake Limit Fault / Advance Brake Limit OK.
Advance brake limit fault, check limits and input DAC are correct when doors are both open and closed.
[Fault]

Code-061 SERVICES DBL Emergency Recall 1 / Off Emergency Recall 1.
Lift is on Emergency Recall 1 Service.
[Service]

Code-062 MOTION SGL Leveller/Direction Error.
Leveller or Direction error, check vanes etc, brake settings for rollback, drive settings for current limit.
[Fault]

Code-063 MOTION MAN Multi Level Error / Multi Level Reset.
Leveller error on this floor 3 accumulated times, check tape head (LU/LD/DZ/DZM) signals. Clear fault in toolbox menu.
[Breakdown]

Code-064 CONTROL DBL Thermal Over/Under Temperature / Thermal OK.
Drive / Motor Room temperature sensor has tripped indicating a thermal over or under temperature issue in the motor room. The lift will stop at the next available floor. The User Data indicates the tripped device. 1 = Drive, 2 = Motor Room, 3 = Both.
[Breakdown]

Code-065 CONTROL SGL RTC Change To DST.
RTC has changed to DST, The CPU has automatically changed the time, due to DST rules.
[Information]

Code-066 DRIVE SGL MC Or BKR Lost High Speed.
MC or BKR feedback lost on high or medium speed, check drive safety circuit, or lock tip.
[Fault]

Code-067 DRIVE SGL MC Or BKR Lost Low Speed.
MC or BKR feedback lost on low / levelling speed, check drive safety circuit, or lock tip.
[Fault]

Code-068 SERVICES DBL Fire Recall / Off Fire Recall.
On Fire Recall the lift will return to the fire floor as soon as possible, reversing direction if needed. If the doors are open they will nudge closed, if available, Note: the door open push and the safety edge will be ignored. When at the fire floor the doors will open and remain open. No calls can be entered, Fire Recall Indicator output will be active.
[Service]

Code-069 SERVICES MAN Prepare To Test / Off Prepare To Test.
Lift is on Prepare to Test. The lift will not allow landing calls to be placed in the system.
[Service]

Code-070 SERVICES DBL Fire Service / Off Fire Service.
There are two phases to this service - recall and fireman's control. Once lift has recalled to fire floor it will park with doors open and in constant pressure mode for both closing and opening. Fire officers can then control the lift by holding a car call down until doors fully closed. Additional car calls can be placed but these will cancel any existing call. Lift will only exit this service if signal is removed and lift is returned to fire floor and doors opened.
[Service]

Code-071 SERVICES DBL Special Service / Off Special Service.
All outstanding car calls will be cancelled and the car will park with its doors open and in constant pressure mode. Lift will service the nearest car call placed by the user, cancelling any/all other calls on intercept. On deactivating Car Preference the lift will automatically be taken back into group control.
[Service]

Code-072 SERVICES DBL No Dispatcher / Found a Dispatcher.
This event will be recorded if the car detects a dispatcher failure. Check the communication cable between the controller and dispatcher and ensure the dispatcher is powered on and in service. Check landing push feed and CAN cables.
[Breakdown]

Code-073 MEMORY SGL SRAM Synchronisation.
The SRAM parameter data area needs updating, this is an automatic function to repopulate the parameter data area.
[Fault]

Code-074 MOTION SGL GL Lost Advance Open.
GL feedback signal was lost whilst on advance door opening, check lock circuit. This signal should be present even if the doors are open, due to the lock bridging circuit
[Fault]

Code-075 CONTROL SGL ***Software Reset*.**
Software Reset, The internal CPU has detected an illegal opcode or illegal access problem.
[Fault]

Code-076 CONTROL SGL **Brown Out Reset*.**
Brown Out Reset, The internal CPU has reset due to a brown out on it's power supply.
[Fault]

Code-077 CONTROL SGL ***External Reset*.**
Reset push has been pressed, The internal CPU has detected the NRST signal go low.
[Fault]

Code-078 CONTROL SGL ***Power on Reset*.**
Power on reset, The mains supply has been removed from more than 1 second, check supply wiring or fuses, riser supply.
[Information]

Code-079 CONTROL SGL **Low Power Reset*.**
Low power reset, The internal CPU has had a low power reset.
[Fault]

Code-080 MOTION SGL Emergency Slowdown.
Emergency slowdown. The lift was over speeding as it came into the terminal floor or had a fault that required immediate slowdown, check BFR/TFR/DZ switches, encoders and slowing points / setup.
[Fault]

Code-081 DRIVE SGL MC Lost On Start.
MC feedback lost on starting, check safety circuit/terminal limits, motor overload contacts and drive start settings.
[Fault]

Code-082 DRIVE SGL MC Lost On Stop.
MC feedback lost on stopping sequence, check brake set timing, drive stopping sequence and safety circuit/terminal limits.
[Fault]

Code-083 MOTION MAN Multi Head Error / Multi Head Reset.
Leveller error on 3 accumulated journeys, check tape head signals (LU/LD/DZ,DZM). Clear fault in toolbox menu.
[Breakdown]

Code-084 MOTION SGL Fail To Leave Floor.
Lift has failed to leave floor, check drive if stalled. Status of LU/LD has not changed after set time. Three of these events will give a Multi Start Fail code 014. The Factory defaults for the Escape Floor Time are 2.1 seconds for lifts running at 1m/s or greater, otherwise it is set at 4.2 seconds.
[Fault]

Code-085 MOTION SGL Start Leveller Or Direction Error.
Leveller or direction error on start, check signals (LU/LD), check brake settings for rollback and associated start timers.
[Fault]

Code-086 CONTROL SGL RTC Time Set.
The real time clock time has been set to a new value by the User.
[Information]

Code-087 CONTROL SGL RTC Date Set.
The real time clock date has been set to a new value by the User.
[Information]

Code-088 MOTION SGL Lift Is LOST.
lift is lost due to position data being not valid, check shaft positioning equipment, shaft encoder settings. Lift will dive on next journey
[Fault]

Code-089 MOTION SGL Re-Level Timeout.
Lift failed to re-level after 5 seconds, check levellers (LU/LD) and drive settings.
[Fault]

Code-090 SERVICES MAN Installation Hoist Mode / Off Hoist Mode.
The controller is in installation hoist mode. The motor can be run on inspection or emergency electrical control without the CAN2 car / expansion network plugged in. Turn off after installation
[Service]

Code-091 MEMORY SGL User Upload Fail.
User Upload Fail, The CPU has failed to synchronise the parameter data with the USER settings in EEPROM.
[Fault]

Code-092 MOTION DBL Shaft Encoder Hard Dive Fail / Shaft Encoder Dive OK.
The shaft encoder system has requested a dive 3 times, this has failed to reset the unit's position.
[Breakdown]

Code-093 MEMORY SGL Param Back Up Failed.
Unable to write parameters to backup memory in EEPROM.
[Fault]

Code-094 MEMORY SGL Backup Upload Fail.
Backup Upload Fail, The CPU has failed to upload the parameter data from the BACKUP settings in EEPROM.
[Fault]

Code-095 DOORS DBL Multi Pre Lock Fault / Multi Pre Lock OK.
This event is recorded when the CPU has had 3 Pre Lock Fails. Calls will be cancelled and the lift will be “Out of Service”, parked doors open. Placing a call will clear the event and cause the doors to try to close again. If another code 095 is again generated, following a further three unsuccessful attempts to close, the doors will again park open, but will only respond to car calls.
[Breakdown]

Code-096 MEMORY SGL Parameter Updated.
Parameter successfully written to user EEPROM.
[Information]

Code-097 MEMORY SGL Parameters Restored.
The BACKUP settings in EEPROM have been successfully copied to the USER settings.
[Information]

Code-098 MEMORY SGL Parameters Saved.
Parameters have been successfully saved to backup EEPROM memory
[Information]

Code-099 MEMORY SGL Param Default Fail.
Parameter defaulting has failed. Is card SD1 missing or corrupt? Does the card contain the correct factory parameter file?
[Fault]

Code-100 MOTION SGL Max Re-Level Count Fail.
Maximum number of re-levels accumulated has been exceeded, check oil temperature if hydraulic and LU/LD signals.
[Fault]

Code-101 MOTION SGL Multi Re-Level Error.
Multiple re-level fails at a particular floor.
[Fault]

Code-102 MOTION SGL Max YOYO Exceed.
Max re-levels within 10 mins exceeded.
[Fault]

Code-103 MOTION MAN Motor Run Timer Trip / Motor Run Timer Reset.
Motor has been running for excessive time without movement being seen by the shaft encoder. Check for shaft positioning faults, check car can physically move. Clear fault using button in Solutions menu.
[Breakdown]

Code-104 CONTROL DBL Safety Chain Fault / Safety Chain OK.
Check OSG / final limits and emergency stop switches in motor room or shaft. This event will occur with a lost LAR and TTR, check previous events to see if this is the case.
[Breakdown]

Code-105 CONTROL DBL Main Power Failed / Main Power OK.
Main power has failed, check PS/TN signals on motherboard.
[Breakdown]

Code-106 DOORS DBL Front Door Jammed / Front Door Jam Cleared.
Front Door Jammed, Check door tracks for blockages or Door gear. Doors have tried to open and close without finding either of the door limits
[Breakdown]

Code-107 DOORS DBL Rear Door Jammed / Rear Door Jam Cleared.
Rear Door Jammed, Check door tracks for blockages or Door gear. Doors have tried to open and close without finding either of the door limits
[Breakdown]

Code-108 MOTION MAN LU/LD/DZ Lost Stopped / LU/LD/DZ Stopped OK.
Leveller and Door Zone Signals lost when stopped, check LU, LD and DZ signals and head supply. Fault will need a manual reset via the button in the corresponding event in solutions menu.
[Breakdown]

Code-109 CONTROL DBL CAN1 Bus Off / Error Passive / CAN1 Bus On / Bus OK.
The CAN1 Controller (Group Net.) is not transmitting. Check termination resistors are correct, check baud-rate and wiring.
[Fault]

Code-110 DOORS DBL Front Door Close Fault / Front Door Close OK.
Front Door Close Fault, Check for Door obstructions, Door Tracks, Check door limits / locks / door operation.
[Breakdown]

Code-111 DOORS DBL Rear Door Close Fault / Rear Door Close OK.
Rear Door Close Fault, Check for Door obstructions, Door Tracks, Check door limits / locks / door operation.
[Breakdown]

Code-112 CONTROL SGL Number Of Floors Capped.
Number of floors defined by risers and call collective exceeds working limit, levels have been restricted to those that can be served. Group highest is lower than lift's top floor
[Fault]

Code-113 CONTROL DBL Low Pressure Shutdown / Low Pressure OK. .
Low Pressure has been detected. The lift has returned to the bottom floor and shut down.
[Breakdown]

Code-114 SERVICES DBL 95% Bypass / Off 95% Bypass.
Lift is on Bypass and will not accept any more landing calls until load drops below target. If no car calls present lift will park with doors open after answering the last car call in system
[Information]

Code-115 SERVICES MAN Test Up Limit Operated / Test Up Limit OK.
Test Up Limit Signal Missing or Shorted! Lift will not move when next on test. The fault must be cleared from the 'Solutions' menu
[Breakdown]

Code-116 CONTROL DBL Step Comms Fail / Step Comms Restore.
In-House testing - Communication Issue between Step and the Ethos
[Information]

Code-117 CONTROL SGL RTC Change From DST.
RTC has changed from DST, The CPU has automatically changed the time, due to DST rules. Can be deactivated if required
[Information]

Code-118 MEMORY DBL No Parameters / Parameters Ok.
The backup and user settings are corrupt. Restore to default values via button in 'Settings' menu.
[Breakdown]

Code-119 MEMORY SGL User Params Imported.
User data held on card SD 1 has been imported into Ethos Two user EEPROM memory.
[Information]

Code-120 SERVICES MAN Door Disable / Off Door Disable.
Lift is on Door Disable mode. Landing calls have been disabled
[Service]

Code-121 CONTROL SGL Logged In.
Password has been accepted.
[Information]

Code-122 CONTROL SGL Car Delayed, Calls Cancelled.
All calls have been cancelled because the car was delayed. Check for motion or door related faults.
[Fault]

Code-123 CONTROL DBL WatchDog Disabled / WatchDog Enabled.
The Watchdog has been disabled, do not run the elevator in normal under this condition, move SW7 to it's lower position.
[Fault]

Code-124 DOORS DBL Front Door Open Fault / Front Door Open OK.
Front Door Open Fault, doors have failed to fully open. Check for Door obstructions, Door Tracks, Check door limits / door operation.
[Breakdown]

Code-125 DOORS DBL Rear Door Open Fault / Rear Door Open OK.
Rear Door Open Fault, Check for Door obstructions, Door Tracks, Check door limits / door operation.
[Breakdown]

Code-126 CONTROL SGL Auto Logger Reset.
The Event Logger has auto reset due to corrupt assert table file.
[Information]

Code-127 CONTROL SGL Logged Out.
User has logged out manually or the password time has expired.
[Information]

Code-128 MOTION DBL Stuck SU/SD / SU/SD OK.
Stuck SU/SD or SPX input. Lift cannot update position, check spx input switching and wiring.
[Breakdown]

Code-129 DOORS DBL Rear Door Limit Error / Rear Door Limits OK.
Rear Door Limit Error, Both Limits have been seen at the same time, check limit operation and inversion settings.
[Breakdown]

Code-130 MEMORY DBL Different Templates / Different Templates Ok.
Parameters are incompatible with software version.
[Fault]

Code-131 MOTION MAN Missing BFR/TFR / Missing B/TFR cancel.
Lift travelled full length of the shaft, BFR/TFR not seen, check switch operation and inputs. Clear fault via button in the 'Solutions' menu.
[Breakdown]

Code-132 SERVICES DBL AutoRun Enabled / AutoRun Disabled.
AutoRun has been enabled to run the lift and answer calls, or disabled due to problems encountered, check events.
[Service]

Code-133 MOTION SGL GL|CG Lost Test Speed.
GL or CG lost on Test Speed, check lock circuits and skates etc. for floor indicated by event.
[Fault]

Code-134 CONTROL SGL Trace Triggered.
The event trace has been stopped by detecting the trace event.
[Information]

Code-135 DOORS SGL Gate Lock Short Check.
Potential gate lock short, processor is checking the doors by cycling, 3 times gives a Gate Lock Bridged.
[Fault]

Code-136 MEMORY SGL Parameter SD1 Write Pass.
Parameter data has been written to card SD1
[Information]

Code-137 MEMORY SGL Parameter SD1 Write Fail.
Parameter data not copied to SD1. Check valid card is inserted into slot SD1 and the card has not been disconnected via toolbox menu.
[Fault]

Code-138 MEMORY SGL User Import Fail.
User data held on card SD1 has not been copied to Ethos Two. Is card SD1 missing or corrupt? Does the card contain factory and user parameter files?
[Fault]

Code-139 MOTION SGL Re-level Error.
Lift failed to achieve level after re-level attempt, check levellers (LU/LD) and drive settings.
[Fault]

Code-140 SERVICES SGL Anti-Nuisance.
Car calls were cancelled because no passengers were detected as entering the lift, check safety edge device.
[Information]

Code-141 DOORS DBL Front Door Limit Error / Front Door Limits OK.
Front Door Limit Error, Both Limits have been seen at the same time, check limit operation and inversion settings.
[Breakdown]

Code-142 SERVICES SGL AutoRun Passed.
AutoRun has successfully completed it's task with no faults stopping it's operation.
[Information]

Code-143 SERVICES SGL AutoRun Failed.
AutoRun has been terminated by the system due to a fault / event with the elevator. Check events preceding this one.
[Fault]

Code-144 SERVICES SGL AutoRun Terminated.
AutoRun has been terminated by the user, through the autorun setting or via the help key being pressed.
[Information]

Code-145 MOTION SGL BFR/TFR DIR Error.
Incorrect BFR or TFR sequence. Lift could be travelling in the wrong direction. Check motor wiring and phases.
[Fault]

Code-146 CONTROL DBL CAN1 Duplicate ID / CAN1 Bus OK.
A duplicate id has been received from the CAN1 bus this controller has gone off line.
[Fault]

Code-147 CONTROL SGL SMS Status Request.
An SMS lift status request has been received. An SMS containing basic lift status will be sent back to the originator.
[Information]

Code-148 CONTROL SGL Modem Init, Error.
The modem has not initialised correctly. Check modem power and serial communications cables.
[Fault]

Code-149 SERVICES DBL Valve Test Return / Off Valve Test Return.
Lift is on valve test return service, so we can test the valves, once every 24hrs.
[Service]

Code-150 SERVICES DBL On Bus Stop / Off Bus Stop.
The car is on bus stop service. A pattern of landing calls will be entered automatically to provide a limited level of service. This event is normally preceded by lost push feed or dispatch failure events. Check the push feed supplies LPF/CPF and /or dispatcher communications..
[Service]

Code-151 SERVICES DBL Dispatcher Master / Dispatcher Slave.
Indicates a change in dispatcher status. The master dispatcher is responsible for dispatching landing calls for all cars.
[Information]

Code-152 SERVICES SGL Riser Time-Out.
Landing calls have been cancelled. Cars are in group but have been unable to service landing calls for 2 minutes, check WS95.
[Fault]

Code-153 MOTION DBL Multi LTLR Trip / Multi LTLR Reset.
3 Low Speed Time-outs have occurred, check levellers, check for motor stall, check drive torque settings or LTLR timer.
[Breakdown]

Code-154 SERVICES DBL Emergency Supply Return / Off Emergency Supply Return.
Lift is on Emergency Supply Return Service.
[Service]

Code-155 MEMORY DBL Group CRC mismatch / Group CRC OK.
GDT stamp matches but CRC's do not, problem with network data. Check templates are same.
[Fault]

Code-156 SERVICES DBL No Duty Car ESUP / Duty Car ESUP OK.
Lift is on emergency supply but is no duty car, check duty car settings.
[Breakdown]

Code-157 MEMORY DBL Group Template Problem / Group Template OK.
Group data needs updating but templates do not match. Check software builds.
[Fault]

Code-158 CONTROL DBL Landing Network Fault / Landing Network OK.
The serial landing network has a problem, check landing node alive screens.
[Fault]

Code-159 MEMORY SGL Backup Parameters Imported.
The backup data held on card SD1 have been imported into Ethos Two Backup EEPROM.
[Information]

Code-160 CONTROL SGL Parameter Update Failure.
Parameter write to user EEPROM failed. Please try again. Contact TVC if problem persists.
[Fault]

Code-161 CONTROL DBL CAN2 Bus Off / Error Passive / CAN2 Bus On / Bus OK.
The CAN2 Controller (Expansion Module Bus / Car Network) is not transmitting. Check termination resistors are correct, check baud-rate and wiring.
[Fault]

Code-162 CONTROL DBL CAN2 Duplicate ID / CAN2 Bus OK.
A duplicate id has been received from the CAN2 bus this controller has gone off line.
[Fault]

Code-163 CONTROL SGL SD1 Card Format Fail.
Card SD1 was invalid and has been formatted but the format operation failed. Please insert an alternative card.
[Information]

Code-164 SHAFT ENC. SGL ETSD Card Reset.
ETSD Card µP has reset, check user data for reason.
[Fault]

Code-165 SHAFT ENC. DBL Shaft Encoder Shaft Learn / Shaft Learn Stopped.
Shaft Encoder is on a shaft learn sequence.
[Service]

Code-166 SHAFT ENC. DBL Unusable Shaft Encoder Parameters / Shaft Encoder Parameters OK.
The ETSD parameter version does not match the Ethos Two parameter version. Ensure the Ethos Two control module and ETSD card have been updated to the latest software version.
[Breakdown]

Code-167 SHAFT ENC. SGL Shaft Encoder No Incremental Pulses.
Shaft Encoder is missing quadrature encoder pulses, Ethos Two is trying to move but not registered a change in counts.
[Fault]

Code-168 SHAFT ENC. SGL Shaft Encoder Wrong Direction.
Shaft Encoder counts are changing in the wrong direction.
[Fault]

Code-169 MEMORY SGL EEPROM Block Write Fail.
Block write of parameters to EEPROM has failed. Event User data field indicates EEPROM instance.
[Fault]

Code-170 MEMORY SGL Backup Import Fail.
The backup data held on card SD1 has not been copied to Ethos Two. Is card SD1 missing or corrupt? Does the card contain factory and backup parameter files?
[Fault]

Code-171 SERVICES SGL ADS req message .
The ADS has requested a message not yet defined.
[Fault]

Code-172 SHAFT ENC. SGL Shaft Encoder No ABS Change.
Ethos Two is trying to move but the shaft encoder has not registered change in absolute counts.
[Fault]

Code-173 SHAFT ENC. SGL Shaft Encoder Crash Stop.
Shaft Encoder has caused a crash stop, this is due to over-speeding whilst approaching a terminal floor.
[Fault]

Code-174 SHAFT ENC. DBL ETSD Card Shaft Map Error / ETSD Shaft Map OK Or On A Learn.
ETSD Card has a corrupt shaft map, try a shaft learn procedure (Check-List->Learn Shaft) to cure this problem.
[Breakdown]

Code-175 SERVICES DBL K-Weigh Reset Active / Off K-Weigh Reset.
Lift is on K-Weigh Reset Routine.
[Service]

Code-176 SHAFT ENC. SGL Lost - Position Error.
Car is lost and must dive to reset the position encoding equipment. User Data 1 = Main encoder, 2 = ETSD encoder, 3 = Both.
[Fault]

Code-177 SHAFT ENC. SGL Shaft Encoder Soft Reset Dive.
Shaft Encoder has a large count error and will try to call to the bottom floor to reset it's position.
[Fault]

Code-178 SHAFT ENC. DBL ETSD Card Absolute Encoder Lost / ETSD Card Absolute Encoder OK.
ETSD Card has lost communications to the absolute encoder, check etsd card and encoder.
[Fault]

Code-179 SHAFT ENC. DBL ETSD Communications Lost / ETSD Communications OK.
Lost ETSD communications; check ETSD card loop LED D1 is flashing, check job is configured for ETSD functionality.
[Breakdown]

Code-180 SHAFT ENC. SGL Shaft Encoder Target Problem.
Shaft Encoder cannot give a speed for this run due to it being too short for lowest speed, check shaft encoder slowing distances.
[Fault]

Code-181 DOORS SGL Ramp Lock Fail.
Ramp Lock Failure, The Ramp-Locks have opened or failed to close, Check locks at this floor front or rear.
[Fault]

Code-182 SERVICES DBL Top Final Limit Operated / Top Final Limit OK.
Up Terminal Auxiliary Limit Operated. Lift has over travelled and will recall to bottom floor
[Service]

Code-183 MOTION DBL Shaft Encoder Shaft Map Problem / Shaft Encoder Map OK Or On A Learn.
[Breakdown]

Code-184 MOTION SGL AROA (DZM) Missing Stopped.
Lift has stopped and is missing DZM input, taken from AROA terminal. The lift cannot re-level without the 2nd door zone signal.
[Fault]

Code-185 CONTROL DBL Rope Brake Fault / Rope Brake OK..
Rope brake safety signal is lost. Check the condition of the rope brake.
[Breakdown]

Code-186 SERVICES DBL Lift Isolation / Off Lift Isolation.
Lift has been isolated.
[Service]

Code-187 SHAFT ENC. DBL ETSD Card has pattern control / ETSD Pattern OK.
ETSD card has pattern control, this could be an ETSD, over speed condition or pattern fault.
[Fault]

Code-188 SHAFT ENC. SGL Shaft Encoder Pattern Error.
Shaft Encoder has had an error in the pattern task, consult factory.
[Fault]

Code-189 SHAFT ENC. SGL Shaft Encoder Over Speed.
Shaft Encoder has had an over speed condition, check speed / encoder settings and also SA/SB connections.
[Fault]

Code-190 SHAFT ENC. SGL Shaft Encoder Under Speed.
Shaft Encoder has had an under speed condition check encoder connections / settings and mechanics.
[Fault]

Code-191 SHAFT ENC. MAN Repeated Shaft Encoder Faults / Manual Shaft Encoder Faults Cleared.
[Breakdown]

Code-192 MOTION SGL Landing Gates Fault.
Landing gates not closed whilst starting check lock circuit (GL) / door contacts etc.
[Fault]

Code-193 SERVICES DBL On Remote Recall / Off Remote Recall.
Lift is on Remote Recall Service, this is activated from E-Director.
[Service]

Code-194 MOTION SGL Brake Fail, Starting.
The brake confirmation input was not received on start-up.
[Fault]

Code-195 MOTION SGL Brake Fail, Moving.
The brake confirmation input has dropped whilst moving.
[Fault]

Code-196 MOTION SGL Brake Fail, Stopping.
The brake confirmation input has failed to drop during stopping.
[Fault]

Code-197 MOTION MAN Brake Confirm Fail / Brake Confirm Reset.
The brake confirmation input has failed and the panel has shut down. Clear the fault manually in the solutions menu.
[Breakdown]

Code-198 SERVICES DBL On Urine Detection / Off Urine Detection.
Lift is on Urine Detection. Lift will be recalled to a designated floor and await cleaning
[Service]

Code-199 DRIVE SGL MC Or BKR Lost Zero.
MC or BKR feedback lost on zero speed, check drive settings and safety circuit.
[Fault]

Code-200 SERVICES DBL On Limited Floor Service / Off Limited Floor Service.
Limited Floor Service, Lift will not stop at floors secured by this map. Usually a 'timed' service, check parameters for details
[Information]

Code-201 CONTROL DBL Car Network Fail / Car Network OK..
The serial car network has a problem, check view I/O screens for module status.
[Breakdown]

Code-202 CONTROL DBL Landing Network Failed / Landing Network Working.
The serial landing network has a problem, check view I/O screens for node status.

[Breakdown]

Code-203 CONTROL DBL CAN3 Bus Off / Error Passive / CAN3 Bus On / Bus OK.
The CAN3 Controller (Abs Encoder / Landing Net.) is not transmitting. Check termination resistors are correct, check baud-rate and wiring.
[Fault]

Code-204 CONTROL DBL CAN4 Bus Off / Error Passive / CAN4 Bus On / Bus OK.
The CAN4 Controller on the ETSD Card (Abs Encoder) is not transmitting. Check termination resistors are correct, check baud-rate and wiring.
[Fault]

Code-205 SERVICES DBL Milkman's Service / Off Milkman's Service.
Lift is on Milkman's service control.
[Service]

Code-206 SHAFT ENC. SGL SE Absolute Encoder Error.
Shaft Encoder, Absolute CAN encoder count error, check that the encoder's bearing is not failing or limax tape is defective.
[Fault]

Code-207 SERVICES DBL UPS Recall / Off UPS Recall.
Lift is running on UPS.
[Service]

Code-208 MOTION DBL Contactor Mon.Stuck / Contactors OK.
The main MC or STR Contactor maybe stuck in or stuck out, check contactor or wiring.
[Breakdown]

Code-209 MOTION MAN Contactor Check Fail / Contactors Fail Rst..
The main MC or STR Contactor is stuck in, check contactor or wiring. Will need a manual reset via the Solutions screen
[Breakdown]

Code-210 MOTION DBL Drive Communications Fail / Drive Communications OK.
Communications lost with drive, check looms and drive power / fuses.
[Breakdown]

Code-211 DRIVE DBL Drive Fault / Drive OK.
The drive has an active fault, drive fault bit is set in the comms, check drive and clear fault.
[Breakdown]

Code-212 MOTION SGL TUP/DN or EEOU/D Fault.
TUP-TDN or EEOU/EEOD test direction inputs, have been seen on normal operation, check for wiring faults, serial drive control only.
[Fault]

Code-213 CONTROL DBL Lift Alert Signal / Lift Alert Signal OK.
Lift Alert signal is lost. Check the status of the OSG.
[Breakdown]

Code-214 SERVICES DBL Emergency Recall 2 / Off Emergency Recall 2.
Lift is on Emergency Recall 2 Service.
[Service]

Code-215 SERVICES DBL Emergency Recall 3 / Off Emergency Recall 3.
Lift is on Emergency Recall 3 Service.
[Service]

Code-216 CONTROL MAN Safety Gear Operated / Safety Gear OK.
The Safety Gear has operated. Possible causes are lift over speed or uncontrolled movement.
[Breakdown]

Code-217 MOTION SGL LU And LD Missing On Stopping.
Lift has stopped and is missing LU and LD input, doors cannot open without 2 proximity signals.
[Fault]

Code-218 MOTION SGL Position Count Error On Stopping.
Lift has stopped and is missing it's internally generated LU or LD vanes, the position count may be incorrect for this floor.
[Fault]

Code-219 MOTION SGL Valve Fail - Starting.
The valve confirmation input was not received on start-up.
[Fault]

Code-220 MOTION SGL Valve Fail - Moving.
The valve confirmation input has dropped whilst moving.
[Fault]

Code-221 MOTION SGL Valve Fail - Stopping.
The valve confirmation input has failed to drop during stopping.
[Fault]

Code-222 MOTION MAN Valve Confirm Fail / Valve Confirm Reset.
The valve confirmation input has failed and the panel has shut down. Clear fault in toolbox menu.
[Breakdown]

Code-223 MOTION MAN Valve Test Failure / Valve Test Reset.
The lift has moved whilst testing the valves and has been shut down. Clear fault in toolbox menu.
[Breakdown]

Code-224 MOTION MAN Not in Door Zone - A3 / Stopped in Door Zone OK - A3.
The lift stopped out of door zone or lost DZM signal whilst re-levelling or advance door opening. Unintended movement, this event needs resetting manually.
[Breakdown]

Code-225 SERVICES DBL ADS comms failure / ADS comms OK .
The ADS communications has timed out between itself and the Ethos Two controller.
[Breakdown]

Code-226 MOTION DBL Winter Run Start / Winter Run End.
The lift was moved to prevent seizure during the long dark winter months
[Information]

Code-227 MOTION DBL Dormant Parking / Dormant Parking End.
The lift parked at the bottom floor after a period of idleness to reduce hydraulic pressure.
[Information]

Code-228 MOTION DBL Power Saving On / Power Saving Off.
Lift has entered a power saving shutdown mode. Enter a car call to awaken.
[Information]

Code-229 MOTION DBL Normal Service / Off Normal Service.
Normal Service. Lift is in normal service with no active faults that would prevent service to users
[Information]

Code-230 MOTION DBL Self-Test Start / Self-Test End.
The lift is performing a self test after a defined period of idleness. Parameters can be set to customise operation
[Information]

Code-231 MOTION DBL Seek Next Floor Up / Seek Floor Up Found.
The lift is moving to the next floor, in the up direction.
[Information]

Code-232 MOTION DBL Parking / Parking End.
The car is homing (parking) to a predefined floor level after a period of idleness.
[Information]

Code-233 DOORS DBL Front Door Lock Test Request / Front Door Lock Test Complete.
The front door lock circuitry is being tested. Also known as a Preflight check.
[Information]

Code-234 DOORS DBL Rear Door Lock Test Request / Rear Door Lock Test Complete.
The rear door lock circuitry is being tested. Also known as a Preflight check.
[Information]

Code-235 MOTION MAN Manual Events Reset / Manual Events Reset Acknowledged.
All manually resettable events have been restored, this event must be acknowledged. Button to reset can be found in the Solutions screen
[Breakdown]

Code-236 SERVICES DBL Awaiting Car Call / Car Call Pressed.
Fault active that requires car call to try to put the lift back in service, press any car call.
[Breakdown]

Code-237 CONTROL DBL SD1 Card Absent / SD1 Card Detected.
SD1 card is missing, please insert a micro SD card into slot SD1. Without a card event data will not be recorded
[Information]

Code-238 CONTROL DBL SD1 Card Error / SD1 Card Okay.
Card error, User Data field provides card and error code, contact TVC for assistance
[Information]

Code-239 CONTROL SGL SD1 Card Formatted.
The SD1 card was invalid and has successfully been formatted.
[Information]

Code-240 CONTROL DBL SD1 Card Full / SD1 Card Not Full.
SD1 card is full, please make more space available.
[Information]

Code-241 CONTROL DBL Car Network Fault / Car Network OK..
The serial car network has a problem, check car node alive screens.
[Fault]

Code-242 MOTION SGL Contactor Mon.Stuck.
The main MC or STR Contactor maybe stuck in, check contactor or wiring.
[Fault]

Code-243 MOTION SGL LTLR Tripped.
Low Speed Time Out has timed, check levellers, check for motor stall at low speed, check drive torque settings or LTLR timer.
[Fault]

Code-244 CONTROL DBL Hyd Thermal Recall / Off Hyd Thermal Recall.
Motor room temperature sensor has tripped, car will recall to bottom floor.
[Service]

Code-245 CONTROL MAN Top Final Shutdown / Top Final Limit Reset.
Up Terminal Auxiliary Limit Operated. Lift over travelled and was shut down!
[Breakdown]

Code-246 CONTROL SGL Snapshot Event.
Snapshot Event has been selected within the solution menu by the user.
[Information]

Code-247 CONTROL DBL MMI Link Failed / MMI Link OK.
Communications to the display board has been lost, check hardware.
[Information]

Code-248 CONTROL SGL JSON Read Write Error.
Note event User Data value then contact TVC Customer Support for assistance.
[Fault]

Code-249 CONTROL MAN Final Limit Operated / Final Limit OK.
The Final Limit has operated. Possible causes are lift overrun or uncontrolled movement.
[Breakdown]

Code-250 MOTION DBL Recall Failure / Recall Failure Restore.
The lift failed to recall. Lift has made 3 attempts to get to the designated recall floor and has not been successful
[Breakdown]

Code-251 CONTROL DBL Hyd Thermal Over/Under Temp / Hyd Thermal OK.
Motor Room temperature sensor has tripped indicating thermal over/under temperature in the motor room.
[Breakdown]

Code-252 MOTION DBL Seek TFR/BFR Limit / Found TFR/BFR Limit.
Position verification required. Was lift lost or power cycled?
[Breakdown]

Code-253 CONTROL DBL Menu Service Active / Menu Service Ended.
A special lift service has been initiated via the touch screen, select Activate Service from the Check-List to turn off.
[Service]

Code-254 SERVICES DBL Valve Test Active / Off Valve Test.
Hydraulic valve test in progress, normally after a dormant park.
[Information]

Code-255 SHAFT ENC. DBL Shaft Encoder DZ Stop Learn / DZ Stop Learn Ended.
Shaft Encoder is on a dz stop learn sequence.
[Service]

Code-256 MOTION DBL Incremental Encoder Wiring Fault / Incremental Encoder Wiring OK.
Wiring fault with incremental encoder (J12), check wiring, encoder supply or ABT and ABS switches.
[Breakdown]

Code-257 CONTROL SGL Check SD1.
SD1 Card should be scanned for potential errors (use the error-checking facility on a Windows PC). The card is usable but operations are taking longer than normal. SD1 Execution time can be viewed in menu Toolbox->Debug Screens->Processor Status.
[Information]

Code-258 CONTROL DBL Hydro Anti Creep Return / Hydro Creep - At Bottom Floor.
A fault has requested that the lift be returned to the bottom floor to stop creep whilst the lift is shut down.
[Service]

Code-259 SERVICES DBL Remote Isolation / Off Remote Isolation.
The Lift has been isolated remotely.
[Service]

Code-260 CONTROL DBL Group Call Board Fault / Group Call Boards OK..
A call board is missing from the group bus. Check view I/O screens to determine which board is missing.
[Fault]

Code-261 CONTROL MAN Multiple Thermal Over Temp. / Multiple Thermal OK.
Motor Room temperature sensor has tripped over 3 times. Clear fault using button in Solutions menu.
[Breakdown]

Code-262 MOTION SGL Lift Over G Event.
The lift acceleration has exceeded the maximum permissible value.
[Information]

Code-263 DOORS DBL Lock Bypass Active / Lock Bypass Disabled.
Lock Bypass switch is active this will stop normal movement, part of the lock circuit is bridged.
[Service]

Code-264 MOTION DBL Brake Set Test Active / Brake Set Test Finished.
Brake test switch has been operated. Events after this are logged whilst the lift is crash stopped on a single brake at high speed.
[Service]

Code-265 SHAFT ENC. DBL ETSD Card OKS Monitor Fault / ETSD Card OKS Monitor OK.
The ETSD card has detected that it's OKS output is being kept on by the main CPU, check SW13 on the main CPU. Both DIPs should be in the OFF position if the ETSD card is fitted
[Breakdown]

Code-266 SHAFT ENC. DBL ETSD Card Pattern Monitor Fault / ETSD Card Pattern Monitor OK.
The ETSD card has detected that it's analogue pattern output is being kept on by the main CPU, check SW13 on the main CPU. Both DIPs should be in the OFF position if the ETSD card is fitted
[Breakdown]

Code-267 SHAFT ENC. DBL SE Emer. Terminal Slowdown Test / SE ETSD Test Ended.
Shaft Encoder is on an Emergency Terminal Slowdown (ETSD) test sequence.
[Service]

Code-268 CONTROL DBL CAN5 Bus Off / Error Passive / CAN5 Bus On / Bus OK.
The CAN5 Controller on the ETSD Card (Lnd. Net.) is not transmitting. Check termination resistors are correct, check baud-rate and wiring.
[Fault]

Code-269 SHAFT ENC. DBL SE Param Math Error / SE Param Math Error Ok.
A math error occurred calculating position feedback coefficients. Check encoder settings. Contact TVC if fault persists.
[Breakdown]

Code-270 SERVICES DBL Car Isolated From Group / Car Back In Group.
Car isolated from group, car is no longer part of the group and will answer it's own landing calls only.
[Information]

Code-271 CONTROL MAN DZ or RDZ Stuck On/Off / DZ and RDZ OK .
Stuck DZ or RDZ input. Door Zone is not switching correctly, check DZ or RDZ input switching and wiring.
[Breakdown]

Code-272 SERVICES DBL On Emer.Elec.Operation / Off Emer.Elec.Operation.
Indicates that the control system is in Emergency Electrical Operation. During this time no calls will be accepted and all features such as Fire or Service control are disabled.
[Service]

Code-273 SHAFT ENC. SGL Position Recovered.
An abnormal stop was detected and the incremental position has been reset. Abnormal stops may be caused by mains power or safety circuit interruptions. Check the event log for supplementary events.
[Information]

Code-274 SERVICES DBL On Eng's Access Ctrl / Off Eng's Access Ctr.
Engineer's Access Control. The lift will move to a safe point for the Engineer to access the car top.
[Service]

Code-275 SERVICES MAN Jog Motor Screen Active / Off Jog Motor Mode
Indicates that the MMI Jog Motor screen is active. The motor can be moved via the on screen buttons. During this time no calls will be accepted and all features such as Fire or Service control are disabled..
[Service]

Code-276 SERVICES MAN UPS Shutdown / UPS Shutdown Reset .
UPS Automatic rescue event following lift shutdown. Clear fault using button in Solutions menu.
[Breakdown]

Code-277 CONTROL DBL EMU Log In / EMU Log Out.
The EMU log in button has been set, press again to log out of the EMU. Only applicable if EMU 3 fitted to expansion bus.
[Information]

Code-278 MOTION MAN iCON SMA Monitor Fail / iCON SMA Monitor OK.
Lift has detected a problem with the iCON SMA monitor unit on starting and has shutdown.
[Breakdown]

Code-279 DOORS SGL Glass Door Sensor Overtime.
If the lift doors are held closed by continuous operation of the glass door edge sensor for more than 20 seconds, the event is recorded. Check door for obstructions / GDI-RGDI input operation.
[Information]

Code-280 SERVICES DBL Evacuation Service / Off Evacuation Service.
There are two phases to this service - recall and evacuation control. Once lift has recalled to fire floor it will allow competent persons to evacuate the building before the arrival of Fire Officers. The lift is controlled by holding a car call down until doors fully closed. Additional car calls can be placed but these will cancel any existing call. Lift will only exit this service if signal is removed and lift is returned to fire floor and doors opened.
[Service]

Code-281 MEMORY SGL User JSON Import Warning.
The user data held on card SD1 has been successfully imported however one or more parameter values were incompatible and have been skipped or only partially imported. The event's User Data field gives the number of detected incompatible parameters; these parameters have been set to factory default values. Check lift operation before placing into service.
[Fault]

Code-282 MEMORY SGL Backup JSON Import Warning.
The backup data held on card SD1 has been successfully imported however one or more parameter values were incompatible and have been skipped or only partially imported. The event's User Data field gives the number of detected incompatible parameters; these parameters have been set to factory default values. Check lift operation before placing into service.
[Fault]

Code-283 CONTROL DBL CPU Thermal Over Temperature / CPU Thermal OK.
The internal cabinet temperature has exceeded the safe threshold. The panel will not operate until sufficiently cooled.
[Breakdown]

Code-284 CONTROL SGL CPU Temperature Warning.
The internal cabinet temperature has exceeded the warning threshold. Increase panel cooling.
[Information]

Code-285 CONTROL DBL CAN1 Bus Off / Error Pass. EDir / CAN1 Bus On / Bus OK EDir.
The CAN1 Controller (to E-Director) is not transmitting. Check termination resistors are correct, check baud-rate and wiring.
[Information]

Code-286 CONTROL SGL Emu3 Remote Login Failure.
It has not been possible to log-in remotely to the Emu3 unit at this time.
[Information]

Code-287 SERVICES MAN Overspeed Test Mode / Off Overspeed Test Mode.
The lift has been placed in Overspeed Test mode. Warning: The lift will run at a speed above normal, make sure it's safe to do so.
[Service]

Code-288 SERVICES MAN Buffer Test Mode / Off Buffer Test Mode.
The lift has been placed in Buffer Test mode. Warning: The lift will run at buffer test speed into the buffers, make sure it's safe to do so.
[Service]

Code-289 SHAFT ENC. SGL Shaft Encoder Speed Deviation Fault.
Poor hoist motor control, use the Profile Display. Check drive config and Pattern Speed Error Tolerance in settings.
[Fault]

Code-290 SHAFT ENC. SGL Shaft Encoder Voltage Deviation Fault.
Analogue pattern problem, use the Profile Display. Check Pattern Volts Error Tolerance in settings.
[Fault]

Code-291 CONTROL DBL Drive/Motor Over Temperature / Drive/Motor Temperature OK.
The drive temperature sensor or motor thermistor has tripped indicating a thermal over temperature issue.
[Information]

Code-292 CONTROL DBL Ambient Over/Under Temperature / Ambient OK.
The Ambient temperature sensor has tripped indicating a thermal over or under temperature issue.
[Information]

Code-293 SERVICES DBL On Pit Inspection Control / Off Pit Inspection Control.
Indicates that the control system is in Pit Inspection Control. During this time no calls will be accepted and all features such as Fire or Service control are disabled.
[Service]

Code-294 MOTION MAN Multiple Off Level Events / Multi. Off Level OK.
The car has stopped out of floor level. Check drive/valve stopping setup and/or brake, check slowing for overshoot.
[Breakdown]

Code-295 SERVICES DBL UPS Device Failure / UPS Device OK.
Lift is on Recall Service for UPS Device Failure.
[Service]

Code-296 SERVICES SGL Car Alarm Pressed.
The in car alarm push has been pressed for over 3 seconds.
[Information]

Code-297 SERVICES DBL Passenger Trapped / Passenger Released.
A passenger is potentially trapped within a broken-down car.
[Information]

Code-298 CONTROL DBL EMU Gateway Log In / EMU Gateway Log Out.
The EMU Gateway log in key switch has been set, release key switch to log out of the EMU Gateway. Only applicable if EMU Gateway fitted to expansion bus.
[Information]

Code-299 SERVICES DBL Limax3CP OC/Reset Test Active / Off Limax3CP OC/Reset Test.
Lift is on Limax3CP Reset Routine. This feature is performed at least twice a day, the OC contact of the Limax will be cycled.
[Service]

Code-300 SHAFT ENC. DBL Limax3CP Teach Mode / Limax3CP Normal Mode.
Limax3CP is in teach mode. In this mode the reference positions and floors can be taught in.
[Service]

Code-301 SHAFT ENC. DBL Limax3CP Test Mode / Limax3CP Normal Mode.
Limax3CP is in test mode. In this mode the ETSL up or down feature can be tested.
[Service]

Code-302 SHAFT ENC. DBL SE Limax3CP Fault or Error / SE Limax3CP OK.
Limax3CP Encoder Problem, The Limax3CP Safety Encoder has a fault, check Limax Safe Status screen in Check-List for more detail.
[Fault]

Code-303 CONTROL MAN Limax3CP OC Contact Open / Limax3CP OC Contact OK.
The Limax3CP OC contact has operated. Check Solutions screen or Limax3CP status screen for cause and clear fault.
[Breakdown]

Code-304 CONTROL SGL Limax OC Short Check.
The OC contact of the Limax3CP device is potential shorted out, check safety circuit, processor will cycle OC to check.
[Fault]

Code-305 CONTROL MAN Limax OC Bridged / Limax OC OK.
Limax OC shorted. Check limax OC circuit, safeties for shorts. Press reset button to clear when checks have cleared.
[Breakdown]

Code-306 CONTROL MAN AROA (DZM) Stuck On / AROA (DZM) OK.
Stuck AROA (DZM) input. Door bridging circuit is not switching correctly, check AROA (DZM) input switching and wiring.
[Breakdown]

Code-307 SERVICES DBL Intruder Alarm Overridden / Intruder Alarm Override Ended.
The Intruder Alarm has been overridden via the de-activation input IOV.
[Information]

Code-308 SERVICES SGL Intruder Detected.
Intruder detected, check interlock switches.
[Information]

Code-309 MOTION MAN Rope Stretch Limit Exceeded / Rope Stretch Limit Reset.
The rope stretch limit has been exceeded, triggered by the Rope Stretch Switch input RSS. The rope needs to be inspected by an engineer.
[Information]

Code-310 SERVICES DBL Run-In Test Failed / Run-In Test Fail Reset.
The run-in test has failed to complete its full cycle and the lift has been shut down pending further investigation. Clear fault using button in Solutions menu.
[Breakdown]

Code-311 SERVICES SGL Run-In Test Passed.
The seven-day run-in test has completed its full cycle without issue.
[Information]

Code-312 SERVICES DBL Run-In Test In Progress / Run-In Test Ended.
The seven day run-in test is in progress.
[Information]

Code-313 SERVICES DBL UPS Battery Test Active / Off UPS Battery Test.
Lift is performing a periodic test on the UPS batteries.
[Information]

Code-314 SERVICES DBL Water In Pit Detected / Water In Pit OK.
Water has been detected in the Pit.
[Information]

Code-315 SERVICES SGL Remote Fire Recall Test Passed.
The Remote Fire Alarm Recall test has completed successfully.
[Information]

Code-316 SERVICES SGL Remote Fire Recall Test Failed.
The Fire Alarm Recall test been initiated remotely but has failed to complete successfully.
[Information]

Code-317 SERVICES SGL Remote Fire Recall Test Aborted.
The Fire Alarm Recall test was not able to be performed during the allotted time.
[Information]

Code-318 SERVICES DBL UPS Battery Low / UPS Battery OK.
UPS Low Battery Recall Active.
[Service]

Code-319 SHAFT ENC. DBL Limax3CP EN81-21 Input Fault / Limax3CP EN81-21 Input OK.
Limax3CP EN81-21 input fault. Check limax3CP EN81-21 input, the lift is on inspection or pit control and the EN81-21 input can still be detected.
[Breakdown]

Code-320 SHAFT ENC. DBL Limax3CP Final Limit Pos. Error / Limax3CP Final Limit OK.
Limax3CP Final Limit Error. The top final limit position is below the top floor, or the bottom limit is above the bottom floor. Set final limits correctly with respect to taught ref positions.
[Breakdown]

Code-321 SHAFT ENC. MAN Limax3CP System Reset Required / Limax3CP System Reset OK.
Limax3CP System Reset Required, the Limax3CP device needs it's yearly system reset. Wait until the lift is stationary, with no passengers, then clear the event in solutions or press System Reset in the Checklist->Limax Status Test screen.
[Information]

Code-322 CONTROL MAN Limax3CP Top Final Limit Err. / Limax3CP Top Final Limit Err.
The Limax3CP Top Final Limit has operated. Move car down off limit before resetting this event.
[Breakdown]

Code-323 CONTROL MAN Limax3CP Bottom Final Limit Err. / Limax3CP Bottom Final Limit OK.
The Limax3CP Bottom Final Limit has operated. Move car up off limit before resetting this event.
[Breakdown]

Code-324 CONTROL DBL Limax3CP Test Up Limit Err. / Limax3CP Test Up Limit OK.
The Limax3CP Test Up Limit has operated. Move car down below test limit.
[Fault]

Code-325 CONTROL DBL Limax3CP Test Down Limit Err. / Limax3CP Test Down Limit OK.
The Limax3CP Test Down Limit has operated. Move car up above test limit.
[Fault]

Code-326 CONTROL MAN Limax3CP Top Pre-Trig.Test Limit / Limax3CP Top Pre-Trig.OK.
The Limax3CP Top Pre-Trigger Test Limit has operated. Move car down off limit before resetting this event.
[Breakdown]

Code-327 CONTROL MAN Limax3CP Bot. Pre-Trig.Test Limit / Limax3CP Bot. Pre-Trig.OK.
The Limax3CP Bottom Pre-Trigger Test Limit has operated. Move car up off limit before resetting this event.
[Breakdown]

Code-328 CONTROL MAN Limax3CP Pre-Overspeed Error / Limax3CP Pre-Overspeed OK.
The Limax3CP Pre-Overspeed Error has operated. Check drive/speed setup before resetting this event.
[Breakdown]

Code-329 CONTROL MAN Limax3CP Overspeed Final Error / Limax3CP Overspeed Final OK.
The Limax3CP Overspeed Final Error has operated. Check drive/speed setup before resetting this event.
[Breakdown]

Code-330 CONTROL DBL Limax3CP Pre Test Overspd.Err. / Limax3CP Pre Test Overspd.OK.
The Limax3CP Pre Test Overspeed Error has operated. Check drive/speed setup.
[Fault]

Code-331 CONTROL MAN Limax3CP Test Overspeed Error / Limax3CP Test Overspeed OK.
The Limax3CP Test Overspeed Error has operated. Check drive/speed setup before resetting this event.
[Breakdown]

Code-332 CONTROL DBL Limax3CP Teach Pre-Overspd.Err. / Limax3CP Teach Pre-Overspd.OK.
The Limax3CP Teach Pre-Overspeed Error has operated. Check drive/speed setup.
[Fault]

Code-333 CONTROL MAN Limax3CP Teach Overspeed Error / Limax3CP Teach Overspeed OK.
The Limax3CP Teach Overspeed Final Error has operated. Check drive/speed setup before resetting this event.
[Breakdown]

Code-334 CONTROL MAN Limax3CP Level Overspeed Error / Limax3CP Level Overspeed OK.
The Limax3CP Level Overspeed Error has operated. Check drive/speed setup before resetting this event.
[Breakdown]

Code-335 CONTROL MAN Limax3CP Re-level Overspeed Err / Limax3CP Re-level Overspeed OK.
The Limax3CP Re-level Overspeed Error has operated. Check drive/speed setup before resetting this event.
[Breakdown]

Code-336 CONTROL DBL Limax3CP Terminal Slowdown Err / Limax3CP Term. Slowdown OK.
The Limax3CP Terminal Slowdown Error has operated. Check drive/position setup.
[Fault]

Code-337 CONTROL DBL Limax3CP Test Up Dir.Err./ Limax3CP Test Up Dir.OK.
The Limax3CP Test Up Dir Error has been detected. Check motor and direction wiring.
[Fault]

Code-338 CONTROL DBL Limax3CP Test Down Dir.Err. / Limax3CP Test Down Dir.OK.
The Limax3CP Test Down Dir Error has been detected. Check motor and direction wiring.
[Fault]

Code-339 CONTROL DBL Limax3CP Working Platform Err. / Limax3CP Working Platform OK.
The Limax3CP Working Platform Mode has been detected. Check WKP input, if not in working platform mode.
[Fault]

Code-340 CONTROL MAN Limax3CP Uncontrolled Movement / Limax3CP Uncontrol. Mvmnt.OK.
The Limax3CP Uncontrolled Movement Error has been detected. Check brake or valves, before resetting this event.
Breakdown]

Code-341 SERVICES SGL Overload Overtime.
If the lift remains in an overloaded state for a period exceeding the Timed Overloaded Output Delay Time (normally 15 minutes), the event is recorded.
[Information]

Last Event.

7. Parameter Adjustment and Storage

Most commonly used parameters can be found within their relevant screens e.g. call dwell settings can be found via the Car button.

All other settings including commonly used ones can be found by touching the Settings button from the home screen.

7.1. Parameter Adjustment

Press: Settings → Search Settings

Within this tree menu you will find a list of the settings in function order. Some settings will require you to log in at technician level. [Password = 222222]

Other settings may require the lift to be in a safe condition. Press the machine room stop switch for these.
Some settings cannot be changed whilst the lift is moving.

Saving / Restoring Parameter Sets:

Press: Settings → View Changes

This will display a list of parameters that have been changed from the factory defaults.

Press: Settings → Backup

This will backup current user setting to the on board non-volatile memory.

Press: Settings → Restore

This will overwrite the user settings with the backup settings.

Press: Settings → Default

This will overwrite the user settings with the factory default settings from the SD card.

7.2. Precautions

The event logger and settings backups are kept on the SD1 uSD card. Do not remove the SD card whilst the unit is powered up. Ignoring this may corrupt the card. The unit will function without the card present but certain features in the logger and settings will be limited.

8. Parameter Modification Procedure

Sometimes it may be necessary to change a batch of parameters to reconfigure a panel. The factory will issue a new “json” file that contains the modified settings. Follow this procedure to reconfigure the Ethos Two.

8.1. Lift Parameter Modification

To perform this procedure you will need a PC with USB micro lead and / or an SD card reader.
The Lift board searches for a JSON file named “Modification_CSVX.XX_XX.json” on the SD Card. Ensure only one JSON file of this type is stored on the SD Card’s root directory before following this procedure.

Press: Toolbox → Debug Screens → Processor Status

Check “EA State” says: Good.

Press: Settings → View Changes

Verify parameters. A parameter problem (or absent lift processor SD1 Card) will be reported as an “Unable to fetch differences.” Ensure lift is unoccupied and ready to be taken out of service. Take panel off LAR and TTR (hit the STOP push). Connect a USB lead from the PC to lift card (J16, LHS of board). Seize the USB port, by pressing the SD1 Connect button in the toolbox.

Press: Toolbox → Connect SD1

The Ethos Two unit should now appear as a USB Flash Drive on the connected PC

Backup the entire SD card to your local machine. Copy the factory, user and backup “*.json” files and any binary files located on the SD card’s root into another directory on the SD Card e.g. “\Old\RevX.XX”.

Copy the new JSON file onto the SD card root directory. The SD card’s root directory must contain a factory “factory_CSVX.XX_XX.json” file and preferably should also contain user and backup files, as well as the new modification JSON file.

Safely eject the USB device from the laptop, and tap “Disconnect SD1” in the Toolbox menu. Remove the USB lead.

Press: Settings → Modify Settings

The Ethos Two unit will now proceed to import the modified parameters by firstly overwriting the current backup JSON file with the current user JSON file, then editing the current user JSON file with the required changes.

Press: Settings → View Changes

Use View Changes to verify parameters have been migrated successfully. A parameter problem (or absent lift processor SD1 Card) will be reported as an “Unable to fetch differences” message in this screen.

9. Software Upgrade Procedure

9.1. Lift and Display Board Software Upgrade

To perform this procedure you will need a PC with USB micro lead and / or an SD card reader.

The Lift and Display boards search for binary files named “E2_Lift_Brd_YYYYMMDD_VERS.bin” and “E2_Display_Brd_YYYYMMDD_VERS.bin” on the SD Card. Ensure only one binary file of each type is stored on the SD Card’s root directory before following this procedure.

Press: Toolbox → Debug Screens → Processor Status

Check “EA State” says: Good.

Press: Settings → View Changes

Verify parameters. A parameter problem (or absent lift processor SD1 Card) will be reported as an “Unable to fetch differences.”
Ensure lift is unoccupied and ready to be taken out of service. Take panel off LAR and TTR (hit the STOP push). Connect a USB lead from the PC to lift card (J16, LHS of board). Seize the USB port, by pressing the SD1 Connect button in the toolbox.

Press: Toolbox → Connect SD1

The Ethos Two unit should now appear as a USB Flash Drive on the connected PC

Backup the entire SD card to your local machine. Move the factory, user and backup “*.json” files and any binary files located on the SD card’s root into another directory on the SD Card e.g. “\Old\RevX.XX”.

Copy the new binary files onto the SD card root directory. If a new “factory_CSVX.XX_XX.json” file was supplied copy and replace the original factory JSON file onto the SD card’s root directory. The SD card’s root directory must contain a factory “factory_CSVX.XX_XX.json” file and preferably should also contain user and backup files.
If downgrading software to an earlier build the factory JSON from that earlier build must be copied onto the SD card’s root directory.
Safely eject the USB device from the laptop, and tap “Disconnect SD1” in the Toolbox menu. Remove the USB lead.

Firstly program the display board following these steps:

Move the SD card from the lift to the display board.

Move the lower DIP on the display board (SW4-1) into the ON (left) position. (as shown)

Move the lower DIP on the lift board (SW9-1) into the ON (left) position. (as shown)

Reset the lift processor by pressing the reset button (top edge of the board SW8).

Reset the display processor by pressing the reset button (under the SW4 DIP switches).

Wait for the display software flashing process to complete.

Once complete a red screen will be shown with logo.

Now program the lift board following these steps:

Move the SD card from the display to the lift board.

Move the upper DIP on the display board (SW4-2) into the ON (left) position. (as shown)

Reset the display processor by pressing the reset button (under the SW4 DIP switches).

Reset the lift processor by pressing the reset button (top edge of the board SW8).

Wait for the lift software flashing process to complete.

The screen will say jumping to main program when finished.

Move both pairs of display board DIP switches into the OFF (right) position and move the lower lift board DIP switch into the OFF (right) position. All four DIP switches should be in the OFF (right) position during normal operation.

Reset the display processor. Check the parameters have migrated and are in good order (repeat checks in Step 1. above). Reset the lift processor.

The software revision, build date and time of the Lift, Display and ETSD card may be viewed in

Press: About → Software

Configuration data status may be viewed in

Press: Settings → View Changes

Use View Changes to verify parameters have been migrated successfully. A parameter problem (or absent lift processor SD1 Card) will be reported as an “Unable to fetch differences” message in this screen.

9.2. ETSD Card Software Upgrade (only applies if ETSD card fitted)

The ETSD bootloader searches for a binary file named “E2_ETSD_Brd_YYYYMMDD_VERS.bin”. Ensure only one ETSD binary file is stored on the SD Card’s root directory before flashing.

Insert the SD Card into SD card reader J2 on the underside of the ETSD card.

Insert the SD card with the contacts uppermost.

The location of the ETSD SD card reader J2 is circled.

Move SW2 DIP4 right to the ON position. Press the ETSD reset button SW1.

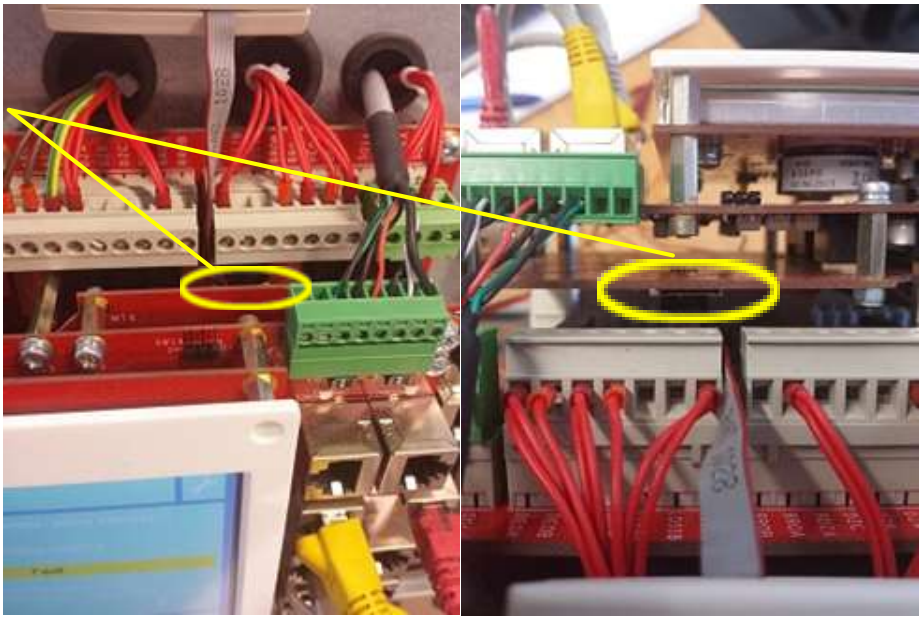

ETSD SW1, SW2, D1 and D2 locations are given to the right.

SW1 Reset button

SW2 DIP 4 is the lowest DIP switch
Right = ON software upgrade
Left = OFF normal operation

D2 Red
D1 Green

Whilst the software is being programmed into memory the green LED D1 remains illuminated. Once programmed the ETSD Card performs a reset and reboots into normal operation as indicated by a brief pulse on red LED D2 followed by periodic flashing of green LED D1. Once the ETSD card has rebooted into normal operation slide SW2 DIP4 left to the OFF position and return the SD card to the Lift processer card reader SD1.

10. Expansion Modules

The Ethos Two system is modular so it can be easily expanded to suit any lift system. Listed below are all the available module options.

10.1. Call Modules

2 types of call module are available 8 way or 16 way, both modules are designed for a 3 wire call system with 24V d.c. acceptance lights. Up to 4 - 8 way call modules and 20 – 16 way modules can be fitted. This gives a massive amount of call I/O available for any combination of 64 floor / front or rear openings / full collective etc.
Additionally the system can be fitted with a full serial landing call network up to 6 risers. Special / Hospital calls are also easily configured.

Call I/O can be viewed through the MMI via the View I/O button:

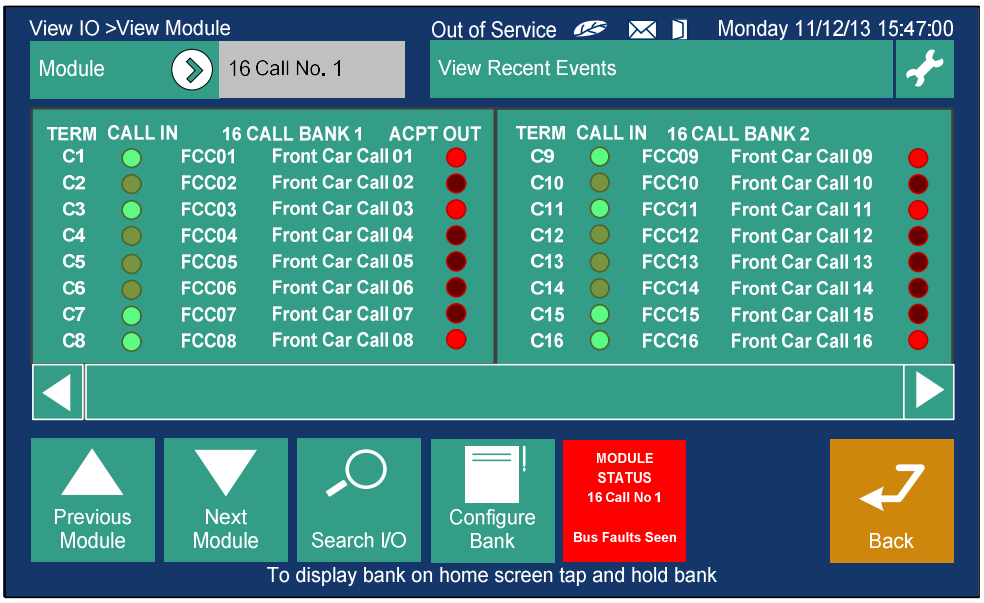

Serial Landing Network Status:

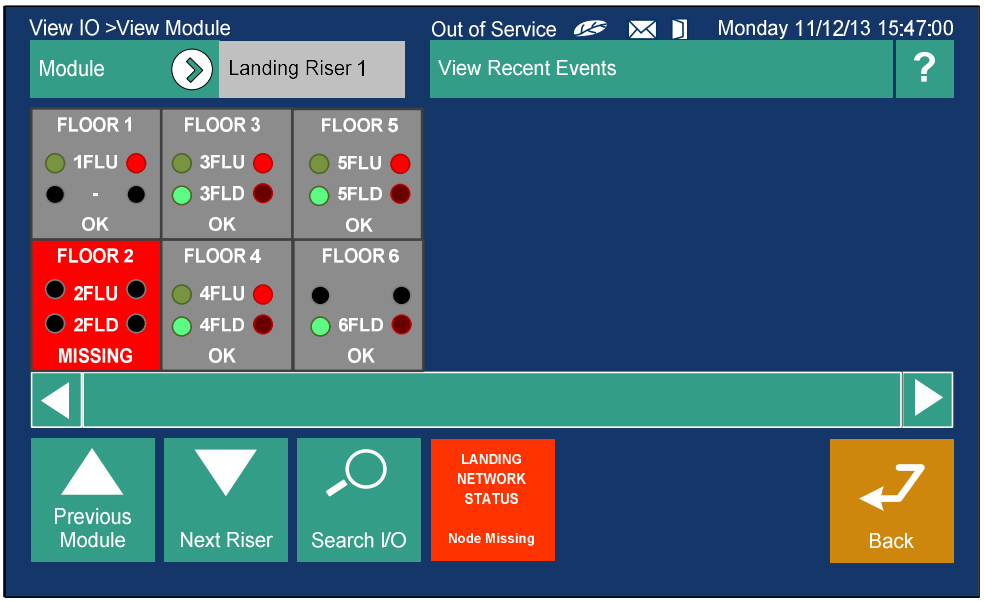

10.2. Feature Modules

4 types of feature module are available 8 way input, 8 way output, 4 way input / output and 24 way output. Up to 10 - 8 way modules, 2 - 4 I/O modules and 2 - 24 way modules can be added, this covers applications that require interfacing to BMS systems or existing hall lanterns etc.

Feature I/O can be viewed through the MMI via the View I/O button

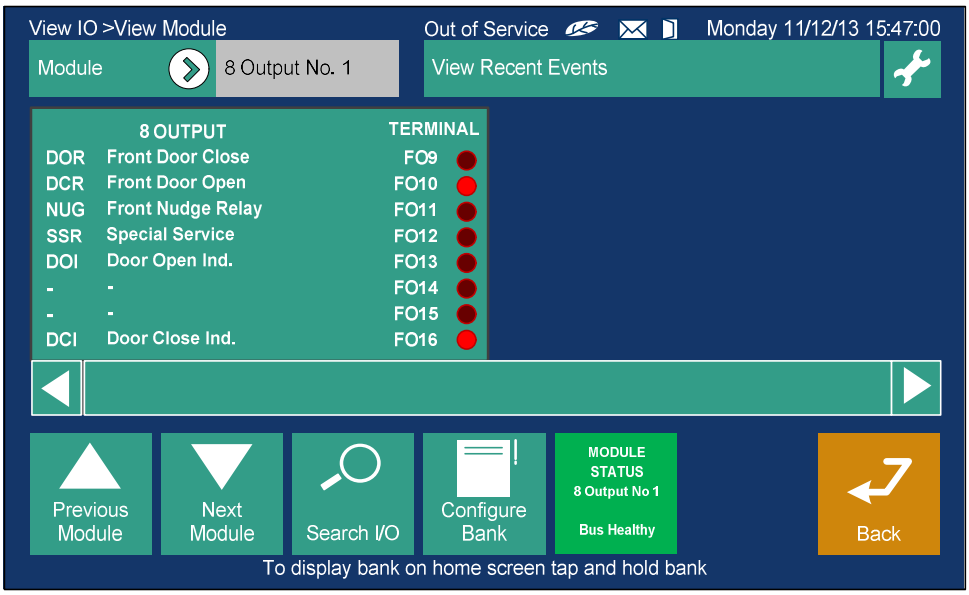

10.3. Serial Network - Installation Guidelines

This general guide is designed to give an outline of installation and setup of an Ethos Two serial network. Please refer to relevant installation pages for more in depth information.

Machine Room

Install main panel. Make sure the routing of any mains or motor cables are kept away from the network cables.
Connect the car network from the trailer to terminals as shown on the panel drawings. Make sure screens from the trailer are earthed, as the drawings show.
If fitted, connect up the shaft network to the power feed board and then if applicable connect this to the other controllers in the group.
Once wiring has been completed and checked follow the standard Ethos Two power up routine.
Make sure all nodes are present in the view I/O screens of the MMI. All nodes can be tested by activating inputs or call pushes and seeing the result appear on the MMI view I/O screens.

Lift Car

The car related boards may be mounted in the car push station or in the terminal box on the car top.
Wire in all car pushes and acceptance lamps plus optional features inputs and outputs as per wiring diagrams.
The car module(s) will be configured for front or rear operation. Also the call expansion boards and I/O boards as will be configured as shown on the controller diagrams.
Connect all nodes together with supplied patch cables, as per the drawings. The final board in the chain should have its network termination DIP's switched on, again make sure these are only active on one node on the car / panel network.
Plug the first board on the car top into the relevant trailer connections.
The screens from the trailer cores must be earthed at the panel end of the trailer only, as per the diagrams.

Lift Shaft

Mount optional Landing Nodes in the shaft, either in the push back boxes or in a suitable plastic box mounted close to the push station.
Each Landing node has a unique ID this should be set as per the controller drawings, make sure the nodes are installed at the correct landings.
Connect Landing pushes and acceptance lamps to nodes, make sure wiring is correct 3-wire system.
Connect each landing node to the next one in the shaft, using the supplied patch cables.
Connect terminator boards, if applicable, to the ends of the landing networks. Warning: a maximum of 2 terminators should be fitted to this network in total.
Connect landing node network back to the Power Feed Board on the Ethos Two controller.

If the optional landing network is not fitted provision for wiring landing calls will be made within the panel on call expansion modules.

10.4. Serial Network - EMC Guidelines (CAN / Ethernet / RS485 / RS232)

It is extremely important that the following guidelines are adhered to:
To maintain the high performance of this control system and its associated peripherals it is essential you follow the EMC and safety instructions below.

- All bus runs must be kept away from motor wiring, a separation of at least 300mm.
- Keep bus wiring away from mains.
- If wiring has to cross any high voltage cable this must be done at right angles.
- Nodes must be mounted away from any high voltage equipment e.g. motors, door gear etc.
- Mains power input and motor output cables should be shielded and earthed as per panel drawings.
- Any screens in the trailing cables must be earthed at both ends.
- Networks must be correctly terminated, with a termination board on the landing network and with termination DIP's on the last car board in the system.

10.5. Serial Network - Fault Finding Procedures

Fault Finding Within a System
With power applied to the system check that all nodes have their green LED's flashing. If the green LED's are not flashing check the power supply on the power feed board.
Check solutions screen and active events in the Ethos Two for any relevant problems
A network failing to respond on power up could be caused by :

- Incorrect or broken wiring connection on the network.
- No nodes connected to the network.
- One or both of the network power supplies not working or connected.
- None of the nodes configured correctly.

If a network has failed to respond to commands sent out by the Ethos Two then repeated tries will be made to establish communication. When the network connection is established this is also reported as an event in the Ethos Two event log.

System checks
After testing an installation as described above and having no response to calls placed in the system the following need to be checked:

- That the panel is on normal mode.
- The DIL switches are set correctly on all boards and termination boards and termination DIL switches are fitted where necessary.
- All network connections are connected to the correct terminals.
- Both networks are connected to the panel connections. (If landing network fitted)
- The car and landing networks are not swapped over. (If landing network fitted)
- Check that the green LEDs' on both Car and Landing nodes are flashing
- Check nodes for red fault LED's. see relevant board installation sheet for description.
- If the green LEDs' fail to illuminate then the 24 volt supply is not connected to the node
- Check external feeds to the car boards

If all of the above are correct then the networks should function correctly.

E2 Car Module

Precautions

The module must be mounted in suitable protective box or car top terminal box. Observe normal precautions for handling electronic devices, avoid static electricity, dampness and extreme temperatures. Please read this instruction sheet fully before use.

Ethos 2 Car Module

The Car Module is designed to be mounted on the lift car. It is used to supply Ethos 2 with door and other car COP signals. The unit has a built in 3-axis accelerometer for ride profile monitoring, so must be mounted securely to avoid false triggering of the accelerometer.
I/O includes:- 8 volt free relay outputs, 12 x 24V d.c. feature inputs and 8 call I/Os. These can be configured via the Ethos 2 MMI.
The module can additionally be used to interface to a load cell for load weighing. An RS232/485 connection is supplied to drive car indicators or speech units.
Please consult main drawings for contract specific wiring and setup.

Specification

Supply Voltage	24V d.c.
Board Operating Current	300mA
Max Input Voltage (FI1-8)	24V d.c.
Max Output Current Call Outputs (per output, LED type indicators only)	300mA @ 24V d.c.
Max Output Current Feature Outputs (FO1-8, per output)	500mA @ 24V d.c.
Max Output Current BZ Output	1A @ 24V d.c.
Output Short Circuit Protection	Yes
Load Cell Inputs	0 – 10V d.c.
Serial Connections	USB (device), RS232, RS485
Dimensions (in DIN carrier)	210 x 90 x 60mm
Standards	EN81-20/50 (EN81-1/2)

DIP Settings

SW2

DIP	Name	
4	Test Mode	DIP 3 to set side OFF = Front
3	Side	ON = Rear
2	Spare	
1	Spare	DIP 4 for test mode (normally off)

SW3

DIP	Name	
2	CAN Term	DIPs 1 and 2 on for CAN termination These should only be set on the last
1	CAN Term	node in the network.

Jumper / Reset Settings

SW1	Place Jumper in the lower position for N/O contact on FO1, upper for N/C
SW4	Place Jumper in the upper position for normal operation, lower for programming.
SW5	Reset Switch press to reset board.

USB Device Connection J2

The Car Module board has a USB micro device connector for programming and also to output monitoring data from the built in 3 axis accelerometer, this is used for TVC factory setup only.

Typical Wiring and Dimensions of Car Module

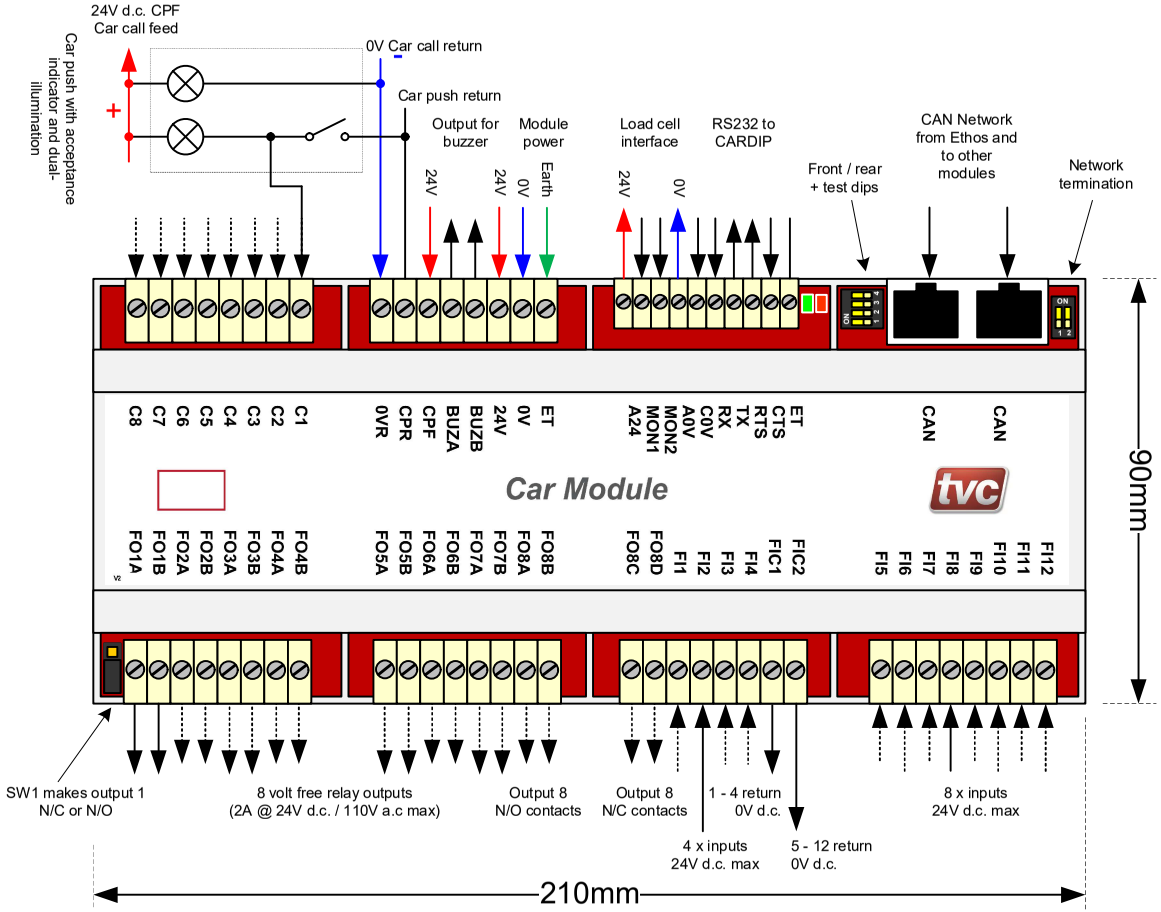

Loop and Fault LED's

The Green LED (D1) will flash every 2 seconds to signify power to node and that the node is running.

The Red LED (D2) will light continuously for 4 seconds when the node is first powered up. After this point the red LED signifies various fault codes. The LED will do a quick flash every 4 seconds if the node has a fault.

1 flash every 4 secs = Node not communicating with Ethos or EMU.
2 flashes every 4secs = Node is experiencing data bus faults.
3 flashes every 4 secs = Node has stopped transmitting due to bus faults.
4 flashes every 4 secs = Node has stopped transmitting or receiving from the data bus

E2 Car Module (Rev 4)

Precautions

The module must be mounted in suitable protective box or car top terminal box. Observe normal precautions for handling electronic devices, avoid static electricity, dampness and extreme temperatures. Please read this instruction sheet fully before use.

Ethos 2 Car Module (Rev 4)

The Car Module is designed to be mounted on the lift car. It is used to supply Ethos 2 with door and other car COP signals. The unit has a built in 3-axis accelerometer for ride profile monitoring, so must be mounted securely to avoid false triggering of the accelerometer.
I/O includes:- 11 volt free relay outputs, 12 x 24V d.c. feature inputs and 8 call I/Os. These can be configured via the Ethos 2 MMI.
An RS232/485 connection is supplied to drive car indicators or speech units.
Please consult main drawings for contract specific wiring and setup.

Specification

Supply Voltage	24V d.c.
Board Operating Current	300mA
Max Input Voltage (FI1-8)	24V d.c.
Max Output Current Call Outputs (per output, LED type indicators only)	300mA @ 24V d.c.
Max Output Current Feature Outputs (FO1-11, per output)	2A @ 24V d.c.
Max Output Current BZ Output	1A @ 24V d.c.
Output Short Circuit Protection	Yes
Serial Connections	USB (device), RS232, RS485
Dimensions (in DIN carrier)	210 x 90 x 60mm
Standards	EN81-20/50 (EN81-1/2)

DIP Settings

SW2

DIP	Name	
4	Test Mode	DIP 3 to set side OFF = Front
3	Side	ON = Rear
2	Spare	
1	Spare	DIP 4 for test mode (normally off)

SW3

DIP	Name	
2	CAN Term	DIPs 1 and 2 on for CAN termination These should only be set on the last
1	CAN Term	node in the network.

Jumper / Reset Settings

SW4	Place Jumper in the upper position for normal operation, lower for programming.
SW5	Reset Switch press to reset board.

USB Device Connection J2

The Car Module board has a USB micro device connector for programming and also to output monitoring data from the built in 3 axis accelerometer, this is used for TVC factory setup only.

Typical Wiring and Dimensions of Car Module

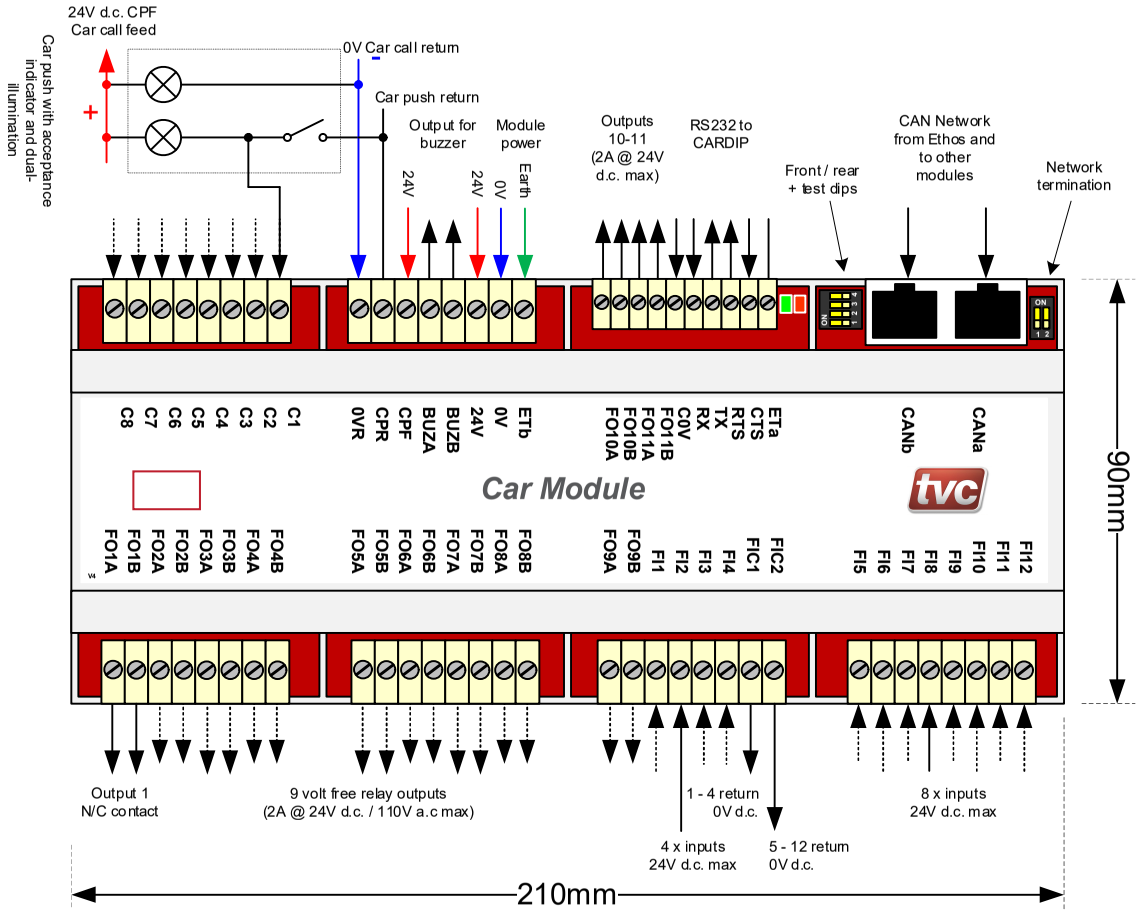

Loop and Fault LED's

The Green LED (D1) will flash every 2 seconds to signify power to node and that the node is running.

The Red LED (D2) will light continuously for 4 seconds when the node is first powered up. After this point the red LED signifies various fault codes. The LED will do a quick flash every 4 seconds if the node has a fault.

1 flash every 4 secs = Node not communicating with Ethos or EMU.
2 flashes every 4secs = Node is experiencing data bus faults.
3 flashes every 4 secs = Node has stopped transmitting due to bus faults.
4 flashes every 4 secs = Node has stopped transmitting or receiving from the data bus

E2 Call Module

Ethos 2 Call Modules 8 / 16 Way

The Call Modules are designed to be mounted on the lift car or in the panel. They are used to supply Ethos 2 with car and landing call signals. The modules are available in 8 way and 16 way form. Consult panel drawings to determine which calls have been assigned to which module fitted. I/O includes:- 8 or 16 call I/Os, these are designed for a 24V d.c. LED type call acceptance lights. The call I/O can be configured via the Ethos 2 MMI.

Please consult main drawings for contract specific wiring and setup.

Specifications

Supply Voltage	24V d.c.
Board Operating Current	300mA
Max Input Voltage (C1-8(16))	24V d.c.
Max Output Current Call Outputs (per output, LED type indicators only)	300mA @ 24V d.c.
Output Short Circuit Protection	Yes
Dimensions (in DIN carrier) 16 Way	160 x 90 x 60mm
Dimensions (in DIN carrier) 8 Way	90 x 90 x 60mm
Standards	EN81-20/50 (EN81-1/2)

Loop and Fault LED's

The Green LED (D3) will flash every 2 seconds to signify power to node and that the node is running.

The Red LED (D5) will light continuously for 4 seconds when the node is first powered up. After this point the red LED signifies various fault codes. The LED will do a quick flash every 4 seconds if the node has a fault.

1 flash every 4 secs = Node not communicating with Ethos 2.
2 flashes every 4secs = Node is experiencing data bus faults.
3 flashes every 4 secs = Node has stopped transmitting due to bus faults.
4 flashes every 4 secs = Node has stopped transmitting or receiving from the data bus

16 Way Call DIP Settings

SW2

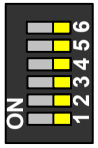

DIP	Name
6	Test Mode
5	250K CAN Baud
4	B8 Node Num
3	B4 Node Num
2	B2 Node Num
1	B1 Node Num

DIP 6 for test mode (normally off)
DIP 5 Turn ON if the node is on the group bus. (V2.00 software onwards)

DIPs 1 to 4 Set node number 0 to 15, Maximum of 16 nodes = 256 calls.

CAN Termination

SW3

DIP	Name
2	CAN Term
1	CAN Term

DIPs 1 and 2 on for CAN termination
These should only be set on the last node in the network.

Precautions

The modules must be mounted in suitable protective box or car top terminal box. Observe normal precautions for handling electronic devices, avoid static electricity, dampness and extreme temperatures. Please read this instruction sheet fully before use.

8 Way Call DIP Settings

SW2

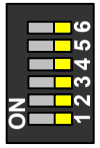

DIP	Name
6	Test Mode
5	250K CAN Baud
4	Spare
3	Spare
2	B2 Node Num
1	B1 Node Num

DIP 6 for test mode (normally off)
DIP 5 Turn ON if the node is on the group bus. (V2.00 software onwards)

DIPs 1 to 2 Set node number 0 to 3, Maximum of 4 nodes = 32 calls.

16 Way Call Module

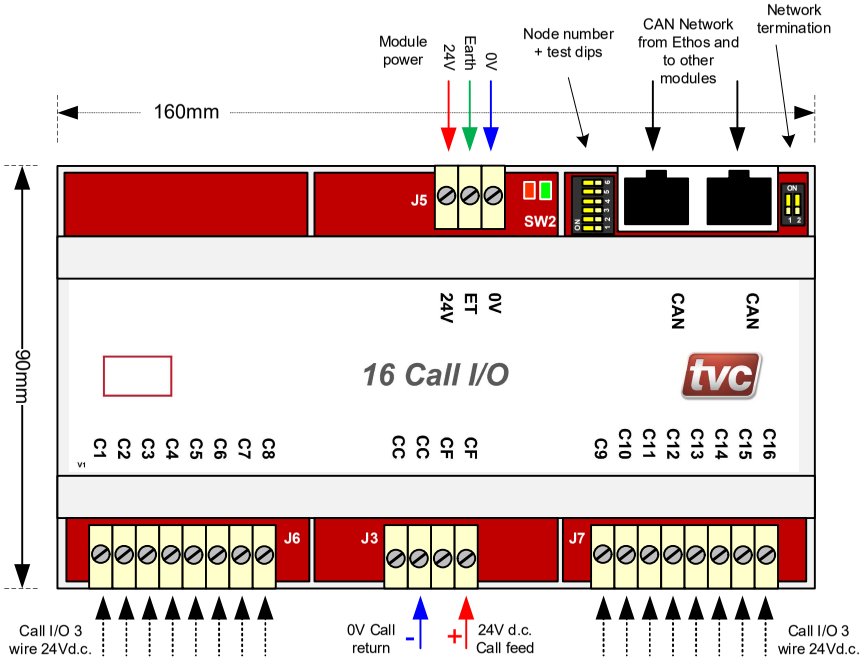

Typical Wiring to Call I/O

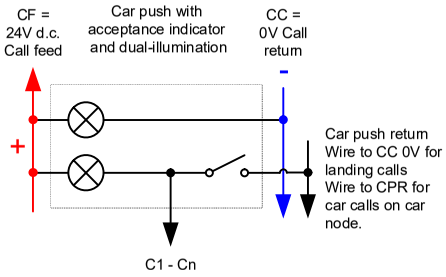

8 Way Call Module

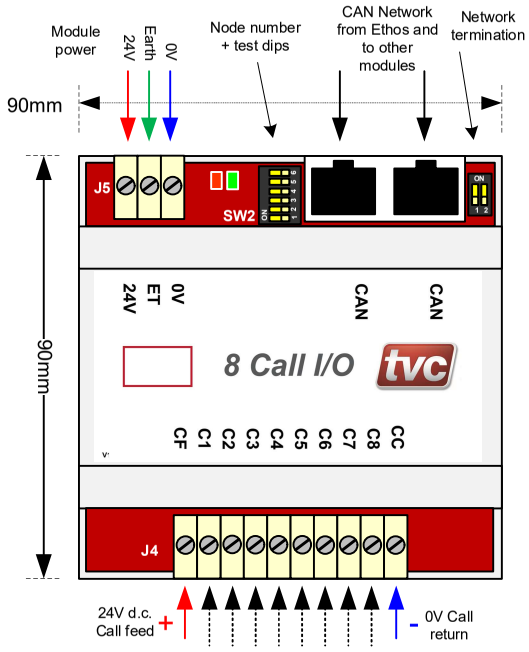

E2 I/O Feature Modules

Ethos 2 - I/O Feature Modules

The I/O Feature Modules are designed to be mounted on the panel or on the lift car. They are used to supply Ethos 2 with signals to and from the lift system. The modules are available in 2 versions of 8 way input and an 8 way output.
Consult panel drawings to determine which inputs and outputs have been assigned to which module fitted.
I/O includes:-
8 Output modules, these are designed to switch up to 110V a.c.
8 Input 110V (.1) modules, these are designed to take 110V a.c. / d.c. inputs.
8 Input 24V (.2) modules, these are designed to take 24V a.c. / d.c. inputs.
The feature cards can be configured via the Ethos 2 MMI.

Please consult main drawings for contract specific wiring and setup.

Precautions

The modules must be mounted in suitable protective box or car top terminal box. Observe normal precautions for handling electronic devices, avoid static electricity, dampness and extreme temperatures. Please read this instruction sheet fully before use.

Specification

Supply Voltage	24V d.c.
8 Way Input Board	
Board Operating Current	50mA
Max Input Voltage (FI1-8) 110V	110V a.c. / d.c. (.1 version)
Max Input Voltage (FI1-8) 24V	24V a.c. / d.c. (.2 version)
Dimensions (in DIN carrier)	90 x 90 x 60mm
8 Way Output Board	
Board Operating Current	150mA
Max Output Current Feature Outputs	2A @ 110V a.c
Max Output Current Feature Outputs (FO1-8, per output)	500mA @ 24V d.c.
Dimensions (in DIN carrier)	105 x 90 x 60mm
Standards	EN81-20/50 (EN81-1/2)

Loop and Fault LED's

The Green LED (D3) will flash every 2 seconds to signify power to node and that the node is running.

The Red LED (D5) will light continuously for 4 seconds when the node is first powered up. After this point the red LED signifies various fault codes. The LED will do a quick flash every 4 seconds if the node has a fault.

1 flash every 4 secs = Node not communicating with Ethos 2.
2 flashes every 4secs = Node is experiencing data bus faults.
3 flashes every 4 secs = Node has stopped transmitting due to bus faults.
4 flashes every 4 secs = Node has stopped transmitting or receiving from the data bus

8 Output DIP Settings

SW2

DIP	Name	
4	Test Mode	DIP 4 for test mode (normally off)
3	Spare	
2	B2 Node Num	DIPs 1 to 2 Set node number 0 to 3,
1	B1 Node Num	Maximum of 4 nodes = 32 outputs.

SW3

DIP	Name	
2	CAN Term	DIPs 1 and 2 on for CAN termination
1	CAN Term	These should only be set on the last node in the network.

8 Input DIP Settings

SW2

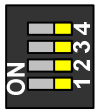

DIP	Name	
4	Test Mode	DIP 4 for test mode (normally off)
3	Spare	
2	B2 Node Num	DIPs 1 to 2 Set node number 0 to 3,
1	B1 Node Num	Maximum of 4 nodes = 32 inputs.

SW3

DIP	Name	
2	CAN Term	DIPs 1 and 2 on for CAN termination
1	CAN Term	These should only be set on the last node in the network.

8 Output Feature Module

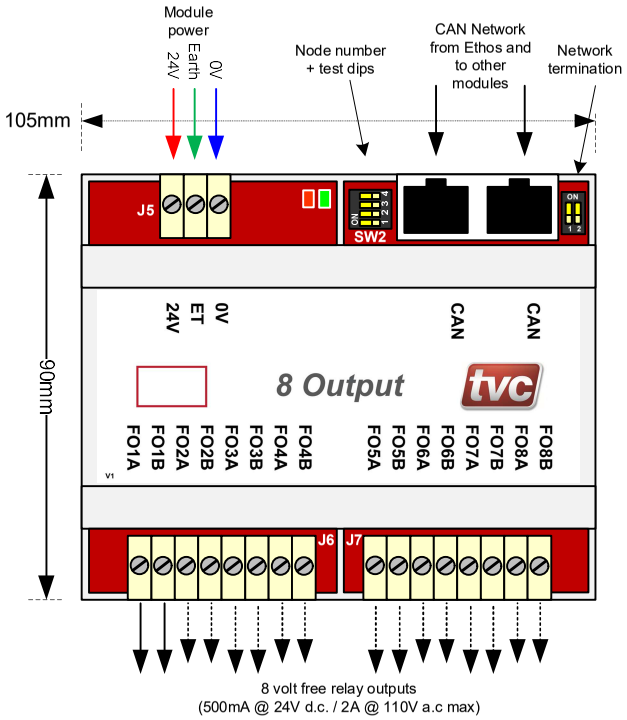

8 Input Feature Modules

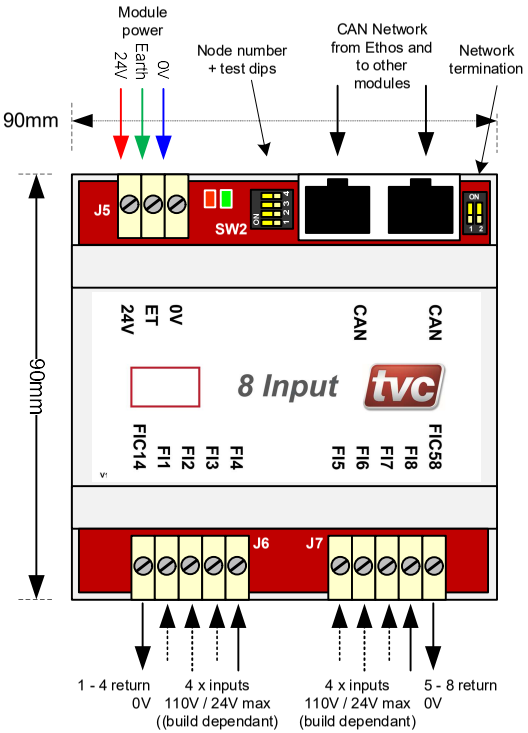

E2 24 Output Module

Ethos 2 24 Way Output Module

The 24 Output Module is designed to be mounted on the panel or on the lift car.
It is used as an output expansion board on the Ethos 2 system. Typically it is used to interface to indicator encoders or to supply outputs for BMS systems.
Consult panel drawings to determine which outputs have been assigned to this particular module.
Outputs include:-
24 volt free relay outputs, these are designed to switch up to 24V d.c.
The output module can be configured via the Ethos 2 MMI.

Please consult main drawings for contract specific wiring and setup.

Precautions

The module must be mounted in suitable protective box or car top terminal box. Observe normal precautions for handling electronic devices, avoid static electricity, dampness and extreme temperatures. Please read this instruction sheet fully before use.

Specification

Supply Voltage	24V d.c.
Board Operating Current	300mA
Max Output Current Feature Outputs (FO1-24, per output)	500mA @ 24V d.c.
Dimensions (in DIN carrier)	105 x 90 x 60mm
Standards	EN81-20/50 (EN81-1/2)

DIP Settings

SW2

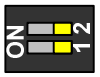

DIP	Name	
2	Test Mode	DIP 2 for test mode (normally off)
1	B1 Node Num	DIP 1 Sets node number 0 or 1, Maximum of 2 nodes = 48 outputs.

SW3

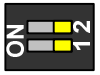

DIP	Name	
2	CAN Term	DIPs 1 and 2 on for CAN termination These should only be set on the last node in the network.
1	CAN Term	

Typical Wiring and Dimensions of 24 Output Module

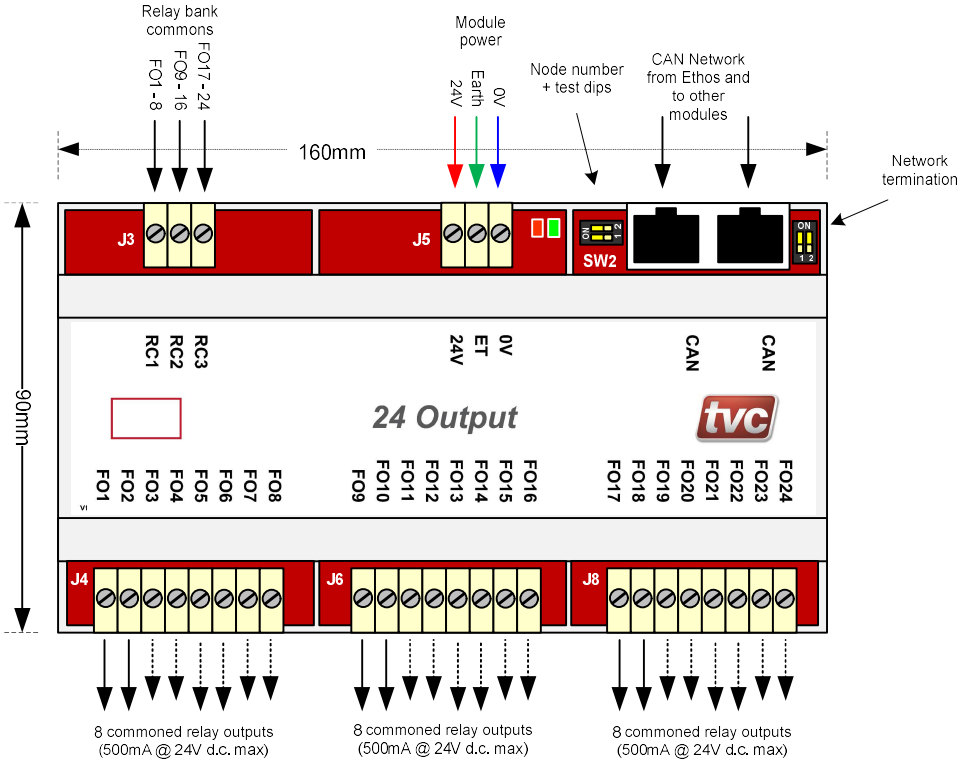

Loop and Fault LED's

The Green LED (D3) will flash every 2 seconds to signify power to node and that the node is running.

The Red LED (D5) will light continuously for 4 seconds when the node is first powered up. After this point the red LED signifies various fault codes. The LED will do a quick flash every 4 seconds if the node has a fault.

1 flash every 4 secs = Node not communicating with Ethos 2.
2 flashes every 4secs = Node is experiencing data bus faults.
3 flashes every 4 secs = Node has stopped transmitting due to bus faults.
4 flashes every 4 secs = Node has stopped transmitting or receiving from the data bus

E2 24 Output Module (Rev2)

Precautions

The module must be mounted in suitable protective box or car top terminal box. Observe normal precautions for handling electronic devices, avoid static electricity, dampness and extreme temperatures. Please read this instruction sheet fully before use.

Ethos 2 24 Way Output Module (Rev2)

The 24 Output Module is designed to be mounted on the panel or on the lift car.
It is used as an output expansion board on the Ethos 2 system. Typically it is used to interface to indicator encoders or to supply outputs for BMS systems.
Consult panel drawings to determine which outputs have been assigned to this particular module.
Outputs include:-
24 volt free relay outputs, these are designed to switch up to 24V d.c.
The output module can be configured via the Ethos 2 MMI.

Please consult main drawings for contract specific wiring and setup.

Specification

Supply Voltage	24V d.c.
Board Operating Current	300mA
Max Output Current Feature Outputs (FO1-24, per output)	500mA @ 24V d.c.
Dimensions (in DIN carrier)	105 x 90 x 60mm
Standards	EN81-20/50 (EN81-1/2)

DIP Settings

SW2

DIP	Name	
2	Test Mode	DIP 2 for test mode (normally off)
1	B1 Node Num	DIP 1 Sets node number 0 or 1, Maximum of 2 nodes = 48 outputs.

SW3

DIP	Name	
2	CAN Term	DIPs 1 and 2 on for CAN termination These should only be set on the last node in the network.
1	CAN Term	

Typical Wiring and Dimensions of 24 Output Module

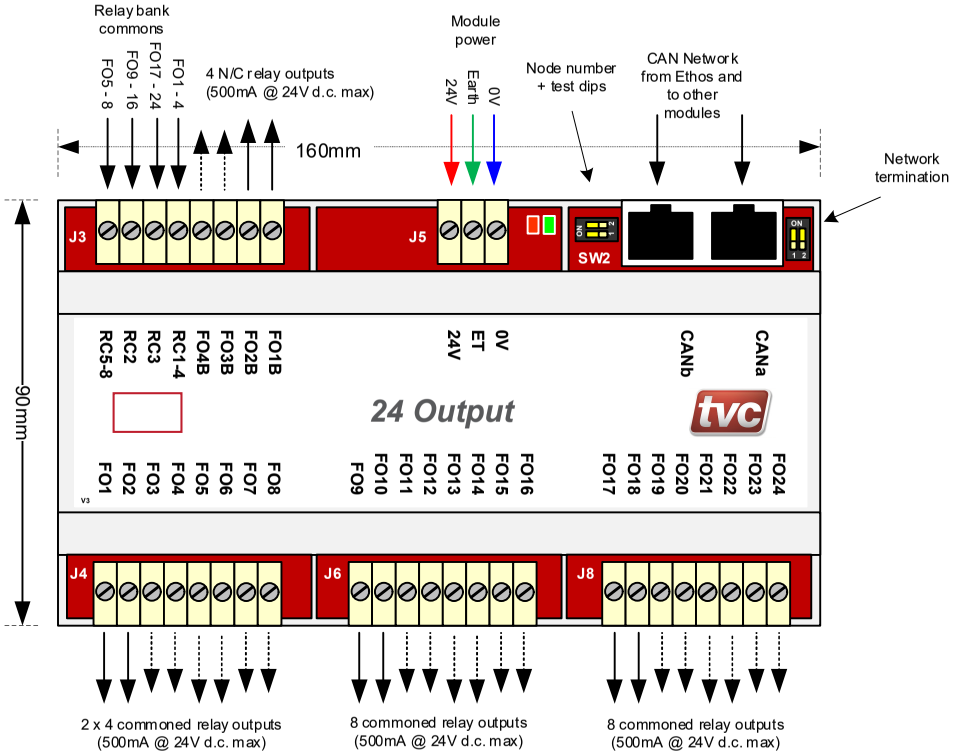

Loop and Fault LED's

The Green LED (D3) will flash every 2 seconds to signify power to node and that the node is running.

The Red LED (D5) will light continuously for 4 seconds when the node is first powered up. After this point the red LED signifies various fault codes. The LED will do a quick flash every 4 seconds if the node has a fault.

1 flash every 4 secs = Node not communicating with Ethos 2.
2 flashes every 4secs = Node is experiencing data bus faults.
3 flashes every 4 secs = Node has stopped transmitting due to bus faults.
4 flashes every 4 secs = Node has stopped transmitting or receiving from the data bus

E2 - 4 Input / 4 Output Feature Module

Precautions

The module must be mounted in suitable protective box or car top terminal box. Observe normal precautions for handling electronic devices, avoid static electricity, dampness and extreme temperatures. Please read this instruction sheet fully before use.

Ethos 2 - 4 Input / 4 Output Feature Module

The 4 Input / 4 Output Module is designed to be mounted on the panel or on the lift car.
It is used as an input / output expansion board on the Ethos 2 system.
Consult panel drawings to determine which inputs or outputs have been assigned to this particular module.
I/O Includes:
4 inputs these are designed to take 24V a.c. / d.c. inputs.
4 volt free relay outputs, these are designed to switch up to 110V a.c. / d.c.
All outputs are changeover contacts, labelled as follows: FOxA = N/O, FOxB = N/C, FOxC = Common.
(FO1 and FO2 share a common return FO12C)

The input / output module can be configured via the Ethos 2 MMI.

Please consult main drawings for contract specific wiring and setup.

Specification

Supply Voltage	24V d.c.
Board Operating Current	150mA
Max Input Voltage (FI1-4) 24V	24V a.c. / d.c.
Max Output Current Feature Outputs	4A @ 110V a.c
Max Output Current Feature Outputs (FO1-4, per output)	4A @ 24V d.c.
Dimensions (in DIN carrier)	105 x 90 x 60mm
Standards	EN81-20/50 (EN81-1/2)

DIP Settings

SW2

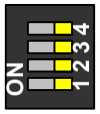

DIP	Name	
4	Test Mode	DIP 4 for test mode (normally off)
3	Spare	
2	Spare	DIP 1 Sets node number 0 to 1,
1	B1 Node Num	Maximum of 2 nodes = 8 inputs / 8 outputs.

SW3

DIP	Name	
2	CAN Term	DIPs 1 and 2 on for CAN termination
1	CAN Term	These should only be set on the last node in the network.

Typical Wiring and Dimensions of 4 Input / 4 Output Feature Module

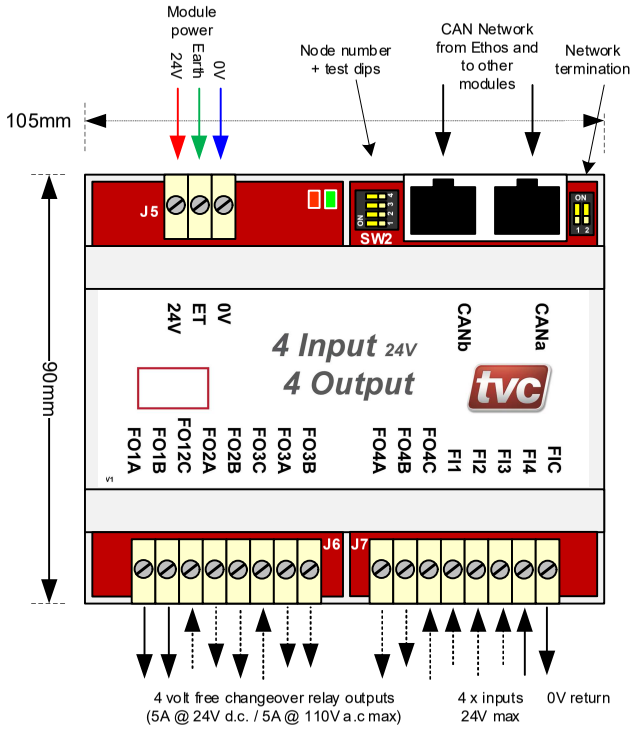

Loop and Fault LED's

The Green LED (D3) will flash every 2 seconds to signify power to node and that the node is running.

The Red LED (D5) will light continuously for 4 seconds when the node is first powered up. After this point the red LED signifies various fault codes. The LED will do a quick flash every 4 seconds if the node has a fault.

1 flash every 4 secs = Node not communicating with Ethos 2.
2 flashes every 4secs = Node is experiencing data bus faults.
3 flashes every 4 secs = Node has stopped transmitting due to bus faults.
4 flashes every 4 secs = Node has stopped transmitting or receiving from the data bus

Landing Node Board

Precautions

The board must be mounted in suitable protective box or landing operating panel. Observe normal precautions for handling electronic devices, avoid static electricity dampness and extreme temperatures. Please read this instruction sheet fully before use.

Specification

Supply Voltage	20 to 24 V d.c.
Board Operating Current	25mA
Max Output Current (per output)	50mA (LED type indicators only)
Output Short Circuit Protection	Yes
Dimensions (including connector)	60 x 55 x 18mm
Fixings	2 x M3 at 51mm centres

DIP Settings

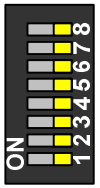

DIP	Name	
8	Test Mode	1 to 5 assign floor 1 to 32 (in binary-1)
7	Riser Bit 1	00000 = Floor 1
6	Riser Bit 0	00001 = Floor 2
5	Floor Bit 4	00010 = Floor 3
4	Floor Bit 3	00011 = Floor 4
3	Floor Bit 2	00100 = Floor 5 etc.
2	Floor Bit 1	.....
1	Floor Bit 0	11110 = Floor 31
		11111 = Floor 32

DIP 8 for test mode (normally off)

6 and 7 assign riser numbers (1 to 4) e.g. 6 off and 7 on = riser 3.

Dimensions

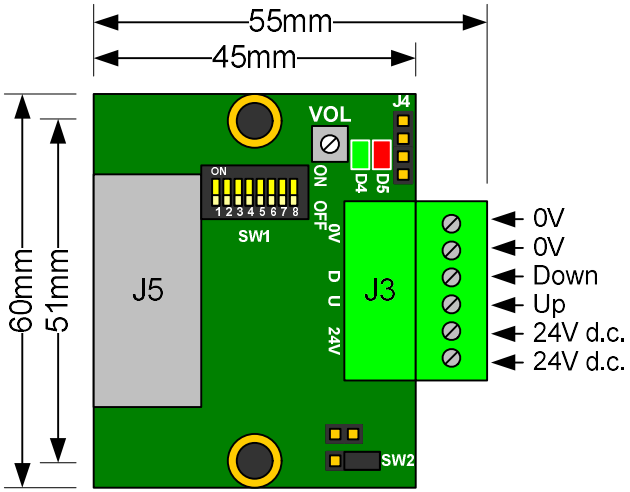

Simple Network Example

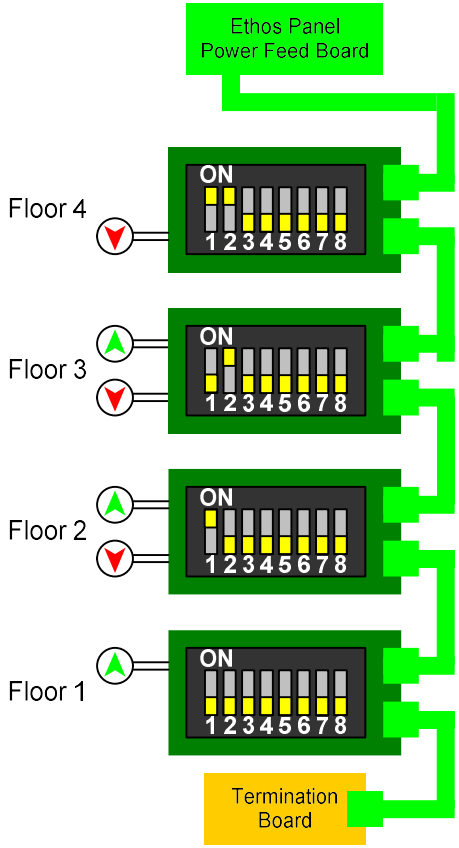

Typical Wiring to Node

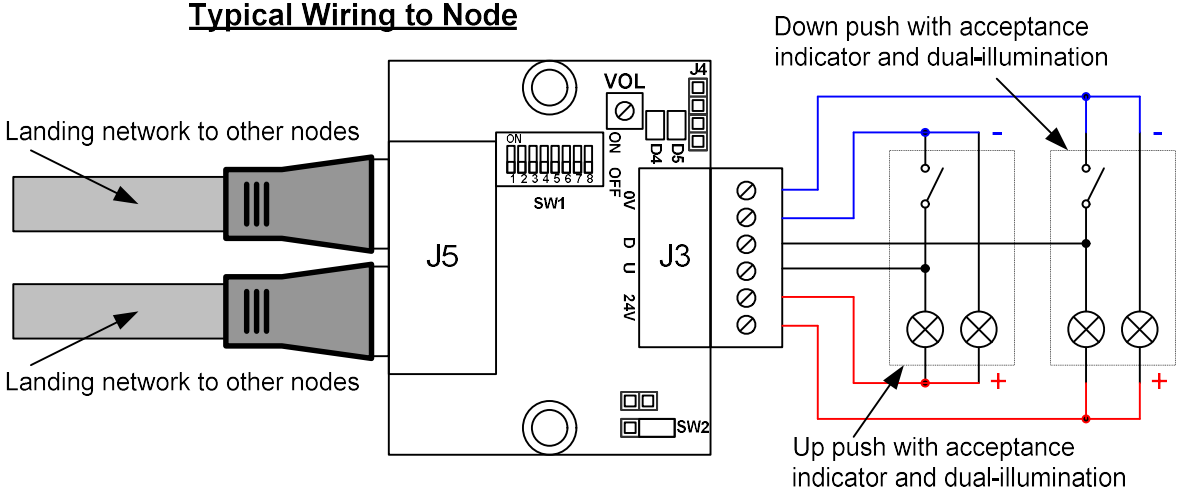

Volume Adjustment

All Landing Node boards come with built in buzzer to conform with DDA requirements. For volume adjustment turn potentiometer R2, clockwise to increase volume and anti-clockwise to lower the volume.

Loop and Fault LED's

The Green LED (D4) will flash every 2 seconds to signify power to node and that the node is running.

The Red LED (D5) will light continuously for 4 seconds when the node is first powered up. After this point the red LED signifies various fault codes. The LED will do a quick flash every 4 seconds if the node has a fault.

1 flash every 4 secs = Node not communicating with Ethos.
2 flashes every 4secs = Node is experiencing data bus faults.
3 flashes every 4 secs = Node has stopped transmitting due to bus faults.
4 flashes every 4 secs = Node has stopped transmitting or receiving from the data bus

5 Inch IPS Indicator Install Sheet

We reserve the right to alter, without giving prior notice, technical data, dimensions and weights described in this manual.
Thames Valley Controls Ltd. Manor Farm Industrial Estate, Flint, Flintshire CH6 5UY
(t): +44 (0) 1352 793222 (f): +44 (0) 1352 793255

Thames Valley Controls

5 Inch Indicator V2
TVL374 ISSUE 1

Introduction

The TVC 5 Inch IPS Indicator can be used as a car or landing indicator.
The unit will display position (double floor characters 50mm high), scrolling travel or committed direction arrows, text, time, date and DOW, and service graphics e.g. fire service, car preference etc.
The display can be adjusted to landscape or portrait orientation via the Ethos Two MMI.
The screen is a full colour IPS LCD display: Size = 5 inch / 800x480 dots, Wide viewing angle 80/80/80/80 (IPS), 16.7M RGB colours, LED backlight with brightness 400 cd/m². Ethos Two Eco mode compatible – will dim LED backlight to save power.
The unit will act as a speech unit whilst in car mode or as a gong and call acceptance buzzer in landing mode. Speech phrases and optional screen background picture can be loaded on the built in SD card via the USB mini connector.
The Indicator also has provision to interface to 2 landing call pushes and a feature input. The unit is driven by a dedicated CAN bus from the Ethos Two controller.
The unit is a slim 26mm deep supplied with a drilled & rebated Polycarbonate lens (5mm thick, clear) with fixings and spacers.

Precautions

Observe normal precautions for handling electronic devices, avoid static electricity, dampness and extreme temperatures. Please read this instruction sheet fully before use. The unit is to be wired as per the relevant panel drawings. Ensure that all interface wires are connected properly and that the supply voltage is correct before turning on the unit.

Specification

Supply Voltage	24 V d.c.
Board Operating Current	150mA
Max Output Current (per output)	50mA (LED type indicators only)
Output Short Circuit Protection	Yes
Audio	3.2W with 4 Ohm speaker / internal speaker.
Dimensions (including connectors)	164.5 (190) x 99.5 x 22mm
Fixings	4 x M3 at 136.4 x 72.6mm
Storage Temperature	-10 °C to +60 °C
Operating Temperature	-10 °C to +50 °C
Humidity Operating Range	0 - 90% relative humidity (non-condensing)

DIP Settings

SW6

DIP	Name	
2	CAN Term	DIPs 1 and 2 on for CAN termination
1	CAN Term	These should only be set on the last node in the network. (optional)

SW4

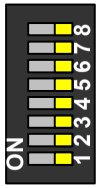

DIP	Car Mode	Landing Mode
8	ON = Car	OFF = Landing
7	OFF = Front / ON = REAR	OFF = Front / ON = REAR
6	N/A	Floor Bit 5
5	N/A	Floor Bit 4
4	PCB Test (Factory Use)	Floor Bit 3
3	RAM Test (Factory Use)	Floor Bit 2
2	N/A	Floor Bit 1
1	N/A	Floor Bit 0

1 to 6 assign floor no.	000000 = Floor 1	000100 = Floor 5	etc.
1 to 64 (in binary-1)	000001 = Floor 2	…….	
	000010 = Floor 3	011111 = Floor 32	
	000011 = Floor 4	111111 = Floor 64	

Loop and Fault LED's

The Green LED (D2) will flash every 2 seconds to signify power to node and that the node is running.

The Yellow LED (D4) will light when the unit is in remote firmware upload mode, or if the SD card is accessed e.g. speech file being played.

The Red LED (D8) will light continuously for 4 seconds when the node is first powered up. After this point the red LED signifies various fault codes. The LED will do a quick flash every 4 seconds if the node has a fault.
1 flash every 4 secs = Node not communicating with Ethos.
2 flashes every 4secs = Node is experiencing data bus faults.
3 flashes every 4 secs = Node has stopped transmitting due to bus faults.
4 flashes every 4 secs = Node has stopped transmitting or receiving from the data bus

Volume Adjustment

Speaker Volume can be adjusted with the on board potentiometer R21, clockwise to increase volume and anti-clockwise to lower the volume. It can also be altered via the Ethos Two MMI. In Landing Mode, the on board speaker is used as a buzzer, for call acceptance, to conform with DDA requirements.
In Car mode the unit is supplied with an external 4 Ohm speaker, for voice annunciation. Place SW1+SW2 in left hand position for external speaker.
For landing gongs the unit can use the on board speaker or external speaker.

Setup / Adjustable Parameters

Press: Indicators & Speech or Settings → Search Settings → Indicators & Speech → TVC Indicator Config.
The settings for the indicators are pre configured within the Ethos Two unit. These can be adjusted via the Indicators button on the home screen or the "Settings" menu.

The following parameters are adjustable:

Screen Brightness	Background and Text Colour	Time / Date Visible 12/24 hr	Speech / Gong Volume
Orientation Portrait or Vertical	Feature Text Messages	Background Image Enable	Landing Gong Option
Call Accept Buzzer Enable	Extended Floor Legends	Display Car Load / Size	

Internal PCB Layout (Rear)

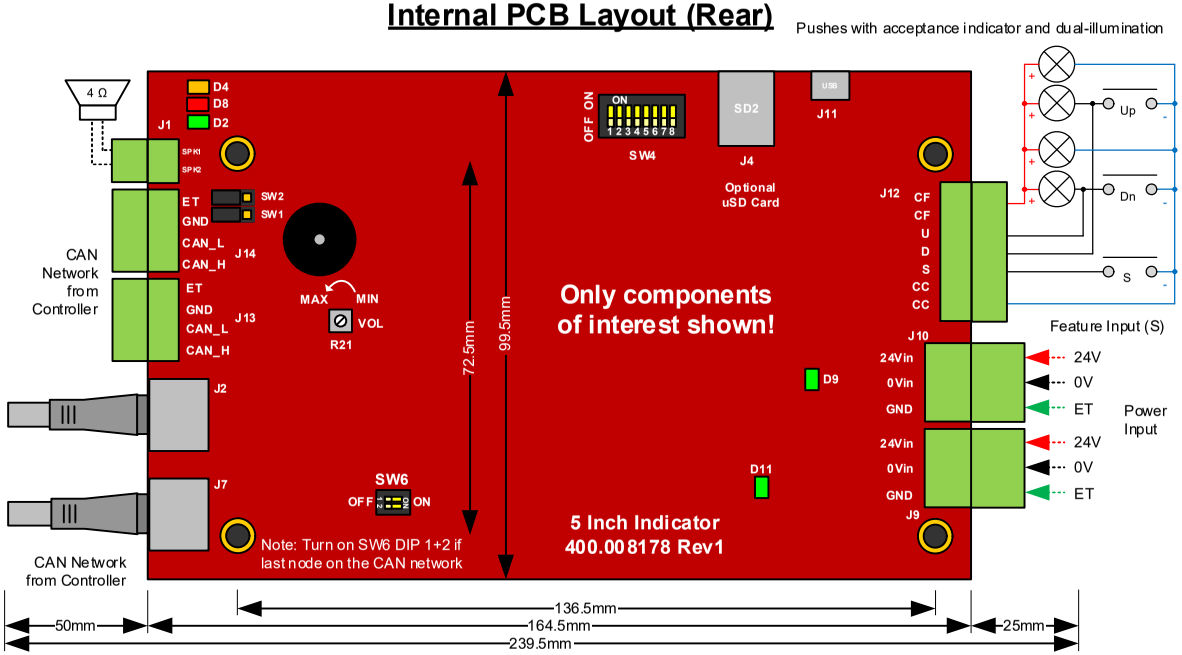

7 Inch IPS Indicator Install Sheet

We reserve the right to alter, without giving prior notice, technical data, dimensions and weights described in this manual.
Thames Valley Controls Ltd. Manor Farm Industrial Estate, Flint, Flintshire CH6 5UY
(t): +44 (0) 1352 793222 (f): +44 (0) 1352 793255

Thames Valley Controls

7 Inch Indicator V2
TVL375 ISSUE 1

Introduction

The TVC 7 Inch IPS Indicator can be used as a car or landing indicator.
The unit will display position (double floor characters 50mm high), scrolling travel or committed direction arrows, text, time, date and DOW, and service graphics e.g. fire service, car preference etc.
The display can be adjusted to landscape or portrait orientation via the Ethos Two MMI.
The screen is a full colour IPS LCD display: Size = 7 inch / 800x480 dots, Wide viewing angle 80/80/80/80 (IPS), 16.7M RGB colours, LED backlight with brightness 800 cd/m². Ethos Two Eco mode compatible – will dim LED backlight to save power.
The unit will act as a speech unit whilst in car mode or as a gong and call acceptance buzzer in landing mode. Speech phrases and optional screen background picture can be loaded on the built in SD card via the USB mini connector.
The Indicator also has provision to interface to 2 landing call pushes and a feature input. The unit is driven by a dedicated CAN bus from the Ethos Two controller.
The unit is a slim 30mm deep supplied with a drilled & rebated Polycarbonate lens (5mm thick, clear) with fixings and spacers.

Precautions

Observe normal precautions for handling electronic devices, avoid static electricity, dampness and extreme temperatures. Please read this instruction sheet fully before use. The unit is to be wired as per the relevant panel drawings. Ensure that all interface wires are connected properly and that the supply voltage is correct before turning on the unit.

Specification

Supply Voltage	24 V d.c.
Board Operating Current	270mA
Max Output Current (per output)	50mA (LED type indicators only)
Output Short Circuit Protection	Yes
Audio	3.2W with 4 Ohm speaker
Dimensions (including connector)	198 (223) x 123.3 x 30mm
Fixings	4 x M3 at 186 x 115mm
Storage Temperature	-10 °C to +60 °C
Operating Temperature	-10 °C to +50 °C
Humidity Operating Range	0 - 90% relative humidity (non-condensing)

DIP Settings

SW6

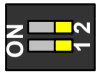

DIP	Name	
2	CAN Term	DIPs 1 and 2 on for CAN termination
1	CAN Term	These should only be set on the last node in the network. (optional)

SW4

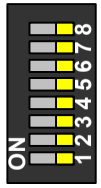

DIP	Car Mode	Landing Mode
8	ON = Car	OFF = Landing
7	OFF = Front / ON = REAR	OFF = Front / ON = REAR
6	N/A	Floor Bit 5
5	N/A	Floor Bit 4
4	PCB Test (Factory Use)	Floor Bit 3
3	RAM Test (Factory Use)	Floor Bit 2
2	N/A	Floor Bit 1
1	N/A	Floor Bit 0

1 to 6 assign floor no.	000000 = Floor 1	000100 = Floor 5 etc.
1 to 64 (in binary-1)	000001 = Floor 2	……..
	000010 = Floor 3	011111 = Floor 32
	000011 = Floor 4	111111 = Floor 64

Loop and Fault LED's

The Green LED (D2) will flash every 2 seconds to signify power to node and that the node is running.

The Yellow LED (D4) will light when the unit is in remote firmware upload mode, or if the SD card is accessed e.g. speech file being played.

The Red LED (D8) will light continuously for 4 seconds when the node is first powered up. After this point the red LED signifies various fault codes. The LED will do a quick flash every 4 seconds if the node has a fault.
1 flash every 4 secs = Node not communicating with Ethos.
2 flashes every 4secs = Node is experiencing data bus faults.
3 flashes every 4 secs = Node has stopped transmitting due to bus faults.
4 flashes every 4 secs = Node has stopped transmitting or receiving from the data bus

Volume Adjustment

Speaker Volume can be adjusted with the on board potentiometer R21, clockwise to increase volume and anti-clockwise to lower the volume. It can also be altered via the Ethos Two MMI. In Landing Mode, the on board speaker is used as a buzzer, for call acceptance, to conform with DDA requirements.
In Car mode the unit is supplied with an external 4 Ohm speaker, for voice annunciation. Place SW1+SW2 in the top position for external speaker.
For landing gongs the unit can use the on board speaker or external speaker.

Setup / Adjustable Parameters

Press: Indicators & Speech or Settings → Search Settings → Indicators & Speech → TVC Indicator Config.
The settings for the indicators are pre configured within the Ethos Two unit. These can be adjusted via the Indicators button on the home screen or the "Settings" menu.

The following parameters are adjustable:

Screen Brightness	Background and Text Colour	Time / Date Visible 12/24 hr	Speech / Gong Volume
Orientation Portrait or Vertical	Feature Text Messages	Background Image Enable	Landing Gong Option
Call Accept Buzzer Enable	Extended Floor Legends	Display Car Load / Size	

Internal PCB Layout (Rear)

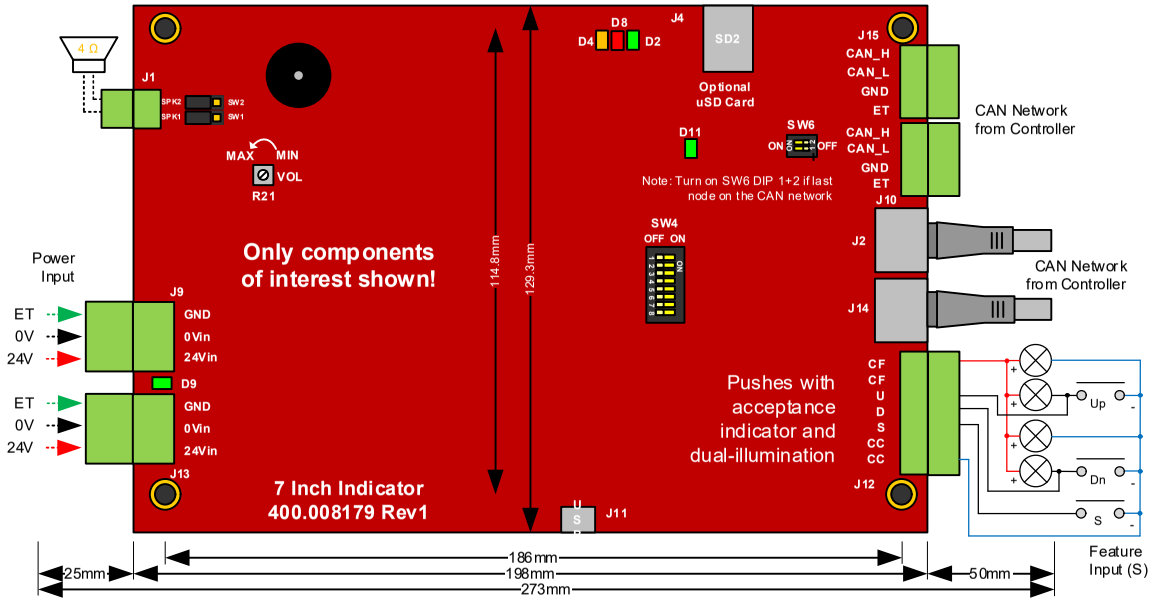

11. General Installation Guidelines

11.1. Step by Step Installation Sequence

The following sequence should be followed when installing the panel and commissioning the lift. Use the “Checklist” screen to aid installation and testing.

Press: Checklist

1) **Install main control panel and motor wiring.**
Follow the wiring diagrams, adhering strictly to the EMC guidelines on the drawings and later in this chapter.

2) **Auto-tune the motor at this point, see chapter on Traction Installation for details or if hydraulic see chapter on Hydraulic Installation.**
The Ethos Two can be used in hoist mode via “Hoist Mode” button. This allows the motor to run if the panel is on Inspection Control (TTR) or Emergency Electrical Operation (PTR). It will ignore missing car and call modules and ignore missing door limits and TFR/BFR limits.

3) **Install the shaft and car ancillary equipment.**
Whilst on hoist mode the car maybe used as a platform to install shaft equipment. See Annex A for a list of devices that need to be fitted to allow the panel to run on hoist mode.

4) **Install car module and shaft encoder equipment e.g. Limax reader (if applicable).**

Press: Checklist → Jog Up/Down

5) **Check shaft equipment.**
Once all equipment has been installed and proven, check door zone signals and BFR/TFR operation. Door Zone instructions can be found in Appendix F and G.
Check motor is rotating in the correct direction. Check shaft encoder feedback devices are counting in the correct direction. In the jog screen the count direction can be reversed for both the main encoder and the ETSD encoder (if fitted). Also the serial drive command direction can be reversed press “Drive Forward = Up” to reverse.

Press: Checklist → Limax Safe Setup (only if Limax3CP shaft encoder fitted)

6) **Teach travel limits of the shaft.**
Use Emergency Electrical Operation to move the lift to the extremes of the shaft and teach the reference positions. See Appendix A for Limax3CP Setup details.

Press: Checklist → Drive Settings

7) **Traction Only - Check Brake / Start / Stop Timing.**
For traction lifts use this menu and settings in the drive to achieve correct brake lift and application timing.

For E300 starting adjust “Pattern Delay” time in the Ethos - this delays the ramp up of speed demand until the brake has lifted. If drive start lock (#I22) is enabled the brake control release delay (#D04) can also be adjusted to give time for the brake to lift before the run profile is followed. On an RFC-S Servo system the torque ramp (#D02) can be adjusted to eliminate the magnetization bump effect on start and stopping.

Make sure the “Pattern Delay” is set 200mS greater than the drive #D04 timer, default is 400mS for the “Pattern Delay” and 200mS for the #D04 brake control release delay drive timer, if this isn’t correct the drive may not follow the pattern correctly.

For stopping, the “Brake Delay” determines time to hold zero speed before the drive is signaled to start the brake drop sequence. The brake apply timer (#D05) in the drive should be set to a value that allows the brake to drop before the drive is disabled (Note: Ethos setting “Disable Delay” is not used on E300 systems). Some adjustment of drive gains may be required to achieve good start and stopping (see relevant drive manual). Confirm start and stopping are smooth and eliminate rollback.

Press: Checklist → Hydraulic Timers

8) **Hydraulic Only – Check Start / Stop Timing.**
For Hydraulics, pump motor run delays can be adjusted here.

Press: Checklist → Learn Shaft

9) **Learn the shaft.**
Once the above steps have been checked the panel is ready to learn the shaft. A “shaft learn” procedure must be carried out before the lift can run at high speed and be entered into service. During the learn, positions of all door zones and TFR / BFR resets are learnt.
Follow the on screen prompts to perform the shaft learn. The lift will find the bottom floor then perform an up then down learn sequence at a reduced speed typically 0.25m/s. For a hydraulic lift, the “learn” may be performed in high or levelling speed, this option can be set in the settings – speed menu. If the lift fails to learn the reason and help text will be presented on the screen.

Press: Checklist → Floor Teach (only if Limax3CP shaft encoder fitted)

10) **Teach floor levels.**
Use Emergency Electrical Operation or Inspection Control to move the lift to each floor and teach the floors positions. See Appendix A for Limax3CP Setup details. This replaces the Learn Shaft sequence above.

Press: Checklist → DZ Stop Distance

11) **Checking Stopping is Consistent.**
Once the shaft has been learnt the next step is to confirm consistent stopping. Once an acceptable start and stop has been achieved e.g. no roll back. The stopping point in relation to the floors can be setup. The DZ Stop Distance screen automatically sets the lift on a learn run into the middle floor from both directions to calculate the optimum stopping point. Perform this sequence and then check that the lift always stops at the same point.

Press: Checklist → Profile Adjust

12) **Traction Only - Checking Acceleration / Speed.**
Use the profile adjust screens to configure the ride profile for Performance / Comfort and Low Energy Modes. Performance is the maximum designed speed and acceleration rate, this is the default setting. If you wish to adjust the acceleration or top speed for ride comfort, select the Comfort profile.
The Low Energy profile is the speed and acceleration used whilst on Eco-Mode.
The Emergency Terminal Slowdown thresholds and rates should be adjusted next.

Hydraulic Only - Checking Slowing Distance.
Use the profile adjust screens to configure the slowing distance for deceleration from high speed.

Press: Checklist → ETSD Test

Operation of the Emergency Terminal Slowdown facility may be tested by putting the lift out of step and then running the lift into a terminal floor, thus mimicking a failure to slow. Follow on screen prompts.

13) **Traction Only – Checking Emergency Deceleration Rate.**

Use the ETSD test screen and the Adjust ETSD Settings button within, to test the emergency terminal deceleration tripping threshold. The threshold and emergency deceleration rate may be adjusted from defaults if required, note the threshold needs to be larger than the normal deceleration rate to stop nuisance tripping. Additionally the crash stop tripping threshold may also be adjusted from defaults if required, note the threshold needs to be larger than the emergency terminal deceleration threshold again to stop nuisance tripping.

Press: Checklist → Floor Trims

14) Checking Floor Levels.
Floor levels may now be checked. The lift should be ridden to every floor in both directions of travel. Errors in both the up and down directions should be noted, If the lift is stopping at a different point in either direction, make sure a DZ Stopping Distance learn has been carried out. Once a note of the floor error has been taken for each floor these figures can be put in the Floor Trim screen. Select the level to adjust the input error. The car graphic will move to illustrate the correct error direction has been entered e.g. stopping 8mm high of floor, the car will be shown high of the floor. Enter each trim and then go to each level and confirm level stopping.

Press: Checklist → Floor Adjust (only if Limax3CP shaft encoder fitted)

15) Adjusting floor levels.
Move the lift on normal with the doors disabled and prepare to test active to move the lift to each floor that needs its level adjusting. See Appendix A for Limax3CP Setup details. This replaces the Floor Trim sequence above.

The car is now ready to be tested before being put into service.

11.2. Testing the Lift

Press: Checklist

Within the check list screen there are various options for testing the lift prior to putting into service.

Auto Run
Auto Run can be used to test the lift for up to 24 hours before it's entered into service, in this mode car calls will be entered automatically, this feature can be used with or without doors disabled.

Activate Service
Activate service allows features such as Fire Control and Emergency Recall to be tested.

Group Network
This screen shows the status of the group communications network. (Reset the "Group Data Timestamp" via the button on the screen before connecting the car to an existing network).

Brake Test (If Fitted)
To test each brake can stop the car from high speed, this screen gives prompts to go through a test sequence. The screen will show how far the car has slid through once the brake has been applied (in millimetres).

Re-Levelling (If Fitted)
To test the re-levelling feature and associated safety circuit, go to the floor trim screen and adjust the trim for the current floor. The controller will then attempt to re-level to the new position. (Return trim back to the measured value after this test.)

Testing of Ethos Two Features for "Protection Against Unintended Car Movement"
The Ethos Two is certified for various UCM solutions (EN81-20 5.6.7), below is a list of the key systems and a description on how the Ethos Two elements of each system can be tested.

UCM Detection - Ethos Two "A3 Dual Brake Interface" + "A3 Over-Speed Governor Solenoid Interface".
These systems use the lock bridging / dual door zone circuit on the Ethos Two control board to detect UCM. To test this element of the system the DZ signal can be removed whilst the lift is re-levelling with its doors fully open. Perform the following checks to prove this element:

a) Place the Ethos Two in "Special Service" via the car key switch or using the "Activate Service" menu in the checklist screen, this will hold the doors in the fully open position. (Make sure the car has a suitable barrier in it to stop passengers using the lift.)

b) Using the "Floor Trim" screen adjust the current floor level by 20 to 30mm.

c) Once the panel is re-levelling, remove the DZ signal from the terminal rail. The control panel should signal the brake or OSG solenoid to drop immediately.

d) The Ethos Two will log a "Not in Door Zone – A3" event which is manually resettable via the solutions menu.

e) This simulates the situation when the car has unintended movement outside the door zone whilst the car has its doors is open.

f) Repeat with a trim of -20 to -30mm to prove in both up and down travel directions.

UCM Stopping - Ethos Two "A3 Dual Brake Interface".
Self-monitoring functionality in the Ethos Two control panel for the verification of the correct opening and closing of the lift machine brake as part of unintended car movement protection of the lift.

To test the dual brake self-monitoring feature during the various travel states perform the following:

a) Starting: Remove the BLC1 or BLC2 inputs prior to stating. The Ethos Two will log a "Brake Fail, Starting" event.

b) Moving: Remove the BLC1 or BLC2 inputs during running. The Ethos Two will log a "Brake Fail, Moving " event.

c) Stopping: Link CT1 to BLC1 or BLC2 inputs during running. The Ethos Two will log a "Brake Fail, Stopping" event after the brake has dropped.

d) Three consecutive "Start" or "Moving" failures will invoke a "Brake Confirm Fail" event; a single "Stopping" failure will invoke the same event. The confirm fail event needs to be reset by a competent person via the solutions menu.

UCM Stopping - Ethos Two "A3 Over-Speed Governor Solenoid Interface".
Ethos Two control panel functionality to operate the over-speed governor solenoid activation and the verification of the correct opening and closing of the solenoid as part of unintended car movement protection of the lift.

To test the verification of this feature perform the following tests:

a) Before the Ethos Two goes on a journey remove the "SGS" input to the panel or Ethos Two. Ethos will log a manually resettable event "Safety Gear Operated" this can be reset via the solutions menu.

b) Prior to starting a journey remove the OSG switch wire in the BC1 terminal, the Ethos will timeout during the start and log a "Drive Start Fail" event. This simulates OSG solenoid failure to energise.

c) To prove the OSG solenoid is dropped prior to a journey remove the OSG switch wire from BC4 terminal. The Ethos will timeout during the start and log a "Drive Start Fail" event. This simulates OSG solenoid failure to de-energise.

d) To prove failure of the OSG solenoid to lift: Prior to starting a journey remove the OSG solenoid wire from PK+ terminal, the Ethos will timeout during the start and log a "Drive Start Fail" event.

e) These 3 tests will prove the OSG solenoid and its contacts are operating correctly.

f) Isolate the panel from the main supply, switch the Handwind switch ON, Check A3 OSG solenoid is energised. (This will allow authorised persons to handwind / release trapped passengers without engaging the safety gear)

g) Set UMD delay on de-energise contacts so that the OSG solenoid is energised for the minimum amount of time to emergency stop from high speed without engaging the safety gear.

h) Test UMD time delay is by-passed should the Car gate open when the lift is moving outside of Door Zone. (Run the lift and disconnect the Car Gate Contact from the CGX terminal).

UCM Stopping - Ethos Two "Bucher DSV-A3 Solenoid Interface".
Application of double safety valve as unintended car movement stopping element in the Ethos Two control system for hydraulic lifts. This systems uses the lock bridging / dual door zone circuit on the Ethos Two control board to detect UCM. To test this element of the system the DZ signal can be removed whilst the lift is re-levelling with its doors fully open. Perform the following checks to prove this element:

g) To test perform the UCM detection check

h) Place the Ethos Two in "Special Service" via the car key switch or using the "Activate Service" menu in the checklist screen, this will hold the doors in the fully open position. (Make sure the car has a suitable barrier in it to stop passengers using the lift.)

i) Using the "Floor Trim" screen adjust the current floor level by 20 to 30mm.

j) Once the panel is re-levelling, remove the DZ signal from the terminal rail. The control panel should signal the DSV-A3 valve solenoid, down valve solenoid and pump motor to de-energise immediately. (No timed delay on de-energise via STR pneumatic timer)

k) The Ethos Two will log a "Not in Door Zone – A3" event which is manually resettable via the solutions menu.

l) This simulates the situation when the car has unintended movement outside the door zone whilst the car has its doors is open.

m) Repeat with a trim of -20 to -30mm to prove in both up and down travel directions.

Limax Status / Test (only if Limax3CP shaft encoder fitted)
Move the lift on normal with the doors disabled, follow the various test options available for the Limax3CP unit. See Appendix A for Limax3CP Testing details.

11.3. General EMC Guidelines

It is extremely important that the following guidelines are adhered to:
To maintain the high performance of this control system and its associated peripherals it is essential you follow the Electro Magnetic Compatibility (EMC) and Safety instructions below. Radio Frequency (RF) voltages and currents generated by the drive system can get into the supply network by inductive and capacitive coupling. This causes unwanted radio frequency interference signals that may damage this or other equipment.

Metal Work Earth Bonding
It is essential for maintaining EMC compliance that all parallel earthing conductors e.g. trunking/conduit & cable trays etc. are bonded together using metal straps or braided cable. Standard control cable is not suitable, coiled earth cables are ineffectual for bonding.
All metal work leading to and from the control cabinet, including the hoist motor, guide rails, shaft screening, guards, covers, floor plates etc. must be electrically bonded together forming a continuous earth system. This is also essential for health & safety reasons. Any metal enclosing electrical or electronic devices must be earthed.

High Voltage Cables
High voltage cables such as supply and motor cables should be run away from signal and low voltage cables, preferable in separate trunking, typical separation distance to be of the order of 0.25 meters. If cables cross low voltage cables, they should cross at right angles.
Where shown in the schematic diagrams, if a cable is screened it should be screened at both ends, braided cable is best, armored cable may also be used. The screens must be terminated on the “W” clamps provided in the panel. Pigtailed screens are inadequate for suppressing RF emissions and immunity, a 360 degree screen or saddle clamp works best.

Incoming Supply Earthing
The main incoming supply must contain a suitably sized earth conductor that is terminated between the controller's main earth point and the incoming mains isolator. Make sure the isolator and supply riser contain a good earth conductor. The incoming supply must be screened and terminated correctly.

Main Hoist Motor Cable
The main motor cable is the worst cable in the system for emitting high levels of interference. It is essential that this cable is run separately, screened and terminated. A suitably sized earth conductor must also be included in this cable.

Motor Encoder Cables
The encoder screened cable should be run directly back to the controller without a break and routed away from cables carrying drive controlled currents or cables carrying currents of an inductive nature. The encoder and its screen must be isolated from the motor at the encoder end, if possible, and earthed at the appropriate terminal on the controller.

Signal Wires - Segregation
All low voltage and signaling cables such as encoder cables, serial network cables, telephone lines & display cables must be segregated from the following high emission cables: Hoist motor supply, brake supply, motor fan supply and door gear supplies.

Signal Wires - Screening
Where shown on the schematics all signal and network wires must be run in shielded cable. Again, shield and screens must be terminated correctly. Pigtailed screens are inadequate for suppressing RF emissions and immunity.

It cannot be stressed sufficiently that all variable frequency PWM inverters, by their nature of switching, emit EMI. It is therefore essential that the aforementioned precautions are observed in order to reduce EMI to acceptable levels.

Equipment Immunity
The Ethos Two controller is designed to comply with current EMC regulation limits. Please be aware that the use of high power radio transmitters over and above these limits, in the vicinity of the controller, may cause the processor or other equipment to malfunction.

11.4. Maintenance Required

The TVC Ethos Two Controller has been designed to require as little routine maintenance as possible. The controller does however contain various mechanical parts that will require routine checking. The maintenance list below is not definitive and should be used as a guide. Lift usage will play a major role in wear and maintenance. It is the user's responsibility to judge when various components require replacing. Note: Parts that are deemed as serviceable are not covered under the controller guarantee.

Be aware that the lift panel will contain equipment that is supplied with potentially lethal voltages. Please make sure the panel is isolated before carrying out any maintenance work.

1 Month After Installation:
Ensure all the screw connections on all terminals are tight; this includes the mains terminals, motor terminals and connections to relays and electronic modules.

Every Month:
Clean cooling fans in the panel and drive system, ensure the filters are free of dust and dirt, replace if necessary.

Every 6 months:
Ensure all the screw connections on all terminals are tight; this includes the mains terminals, motor terminals and connections to relays and electronic modules.
Vacuum out panel and clean any dust / contamination from the covers of modules / drives / relays etc. (depending on the environment, this may be required more frequently.)
Note: Most electronic components will contain static sensitive devices and should not be touched unless you have the required protection.
For traction lifts: Ensure volt drop across each contact in the brake circuit is below 10% of the brake voltage. Also ensure total drop across the whole circuit is less than 10%. Contacts may include BKR, STR, MC1, MCR. Check wiring diagram for details, replace if necessary.

Every Year:
Check batteries in Battery backup / UPS circuits and Emergency lighting. Replace if recommended by manufacturer or if the batteries aren't holding charge.
Check Limax head unit for wear in the tape guide shoes, if fitted.
Check mechanical fixings of any encoders on the motor and shaft encoder systems.

Every 5 Years or less (dependent on usage):
Replace contactors and relays in the brake circuit.

Contactor / Relay	Date Changed	Engineer	Reason

Every 10 Years:
If a Drive is fitted change the DC Bus Capacitors.

12. Traction Lift Installation Guide

12.1. Precautions

AUTOTUNE - An Autotune MUST be carried out during installation. See Auto-tune section and CT E300 Manual for details.

SAVING SETTINGS (E300 Drive) - The settings for any changed parameters will be lost when the drive is powered off. Ensure SAVE procedure is carried out after changing parameters Select “Save Parameters” in any zero menu #mm.00, enter, and then press the red reset key.

ROTATION CHECK – (Geared Only) If the pulse encoder is incorrectly connected, various faults may trip & the motor may run slowly with high current, or become unstable. Ensure the rotation check is carried out. Monitor #J51. Roll/drive lift UP. If no feedback, check encoder & connections. If value is negative, swap A+ & B+, A- & B-, then retest.

OPEN LOOP - Running in Open Loop is not possible with the drive in RFC-S (Closed loop Servo) mode.

12.2. Introduction

The E300 regulator can be adapted to run in various modes:

RFC-S: Closed loop control of a Servo / Permanent Magnet (PM) motor, normally used on gearless applications.

RFC-A: Closed loop control of an Induction motor, this can be geared or gearless.

Open Loop: Voltage / frequency speed control of an induction motor without feedback, slow speed geared applications. (RFC-A Sensor less)

All 3 modes use a combination of frequency, voltage and current control to affect the motor's torque and flux producing components.
The drive is designated for use on lift applications and because it is a digital drive that models the motor characteristics requires minimal manual tuning by the lift installation engineer.
The regulator is designed to accept 3 phase AC power, rectify and output controlled 3 phase AC power to the motor through the transistorised inverter section under the instructions provided by the sophisticated signal/torque/flux control processing section.
Feedback (motor speed and orientation of the rotor) is obtained by a rotary encoder providing incremental sine/cosine signals and absolute position via a communications channel, or just incremental pulses in the case of RFC-A mode. The encoder is connected directly to the motor.
Braking is achieved by absorbing the lift's kinetic energy in the DC bus and, if necessary, absorbing any surplus energy by the use of dynamic braking resistors switched through a dynamic braking module.
Direction and control signals are via a serial communication loom from the Ethos Two lift control microprocessor.
Speed is usually via the analogue pattern loom, giving direct floor approach.
Most E300 parameters listed below can also be found in the E300’s menu A, See Appendix H.

12.3. Step by Step Installation Sequence

The following sequence should be followed when installing the panel and commissioning the lift.
The instructions, which follow, are intended as a guide to site testing and trimming and should be read in their entirety before proceeding. The commissioning engineer has the sole responsibility for taking adequate safety precautions during the carrying out of these procedures:

Wiring and General Precautions

Do not touch the circuit components after turning off the main current power until the CHARGE light is extinguished. Do not connect or disconnect the wiring or connectors whilst the power is on. The main drive earth terminal PE must be grounded.
Do not connect output terminals U, V, W to the AC mains incoming supply.
Do not conduct high-voltage insulation tests on the regulator. Isolate totally the regulator if insulation tests are conducted on the panel.

Mains Wiring and Motor Wiring

See Sheet 6 of the wiring diagrams for connection details.

Follow EMC guidelines in the General Installation section.

Due to the RF voltages and currents generated by the drive causing conducted unwanted radio frequency interference signals which by inductive/capacitive coupling can get into the supply network. It is important to pay particular attention to the EMC guidelines.

Motor Encoder and Motor Data.

Details of the system available to TVC at time of panel manufacture, and used for programming of drive parameters, are recorded on form TVF175 attached to the drive.
Ensure that the following parameters are set in accordance with the motor nameplate, encoder and lift mechanics.
If these details are incorrect, make sure parameters in the drive and Ethos Two match anything modified. e.g. motor RPM etc. If any significant differences are found, contact TVC:

	Parameter	RFC-S (CL, GL)	RFC-A (CL,GL/GD)	Open Loop (OL, GD)
Motor				
Rated Frequency	**#B06**			
Rated Current*	**#B02**			
Rated (Base) RPM	**#B07**			
Rated Voltage	**#B03**	**		
PF / cos φ	**#B04**			
Poles	**#B05**			
Encoder				
Encoder Type	**#C01**			
PPR	**#C03**			
Voltage	**#C04**			
Mechanical				
Elevator Speed	**#E01**			
Sheave Diameter	**#E02**			
Roping	**#E03**			
Gear Ratio Numerator	**#E04**			
Gear Ratio Denominator	**#E05**			

*It is important to note that if the motor current value exceeds the drive heavy duty value, then the current output will be seriously reduced.

** If gearless motor rated voltage is greater than 400V please contact factory before an autotune is carried out.

Preliminary Work

Check all safety circuits and ensure all safety circuits are in order.
Ensure lift doors are closed and remain closed.
Switch to "Emergency Electrical Operation / Panel Test or Inspection Control / Car Top Test"

Power Up

Make sure the encoder type is correct for the application, Gear-less applications require specific encoders such as one with an Hiperface or EnDat interface.
Check any external phase sequence inhibits and correct by reversing input phases if required.
(Note the regulator is not input phase sequence conscious). Carry out a check of motor phasing and encoder wiring, ensure these are as per the schematic diagrams.

Autotune Procedure

In order to optimise control of the motor, the values used within the motor model require to be optimised. Drives will be provided programmed by TVC with all available motor data; however, performance can be improved via measurement of actual motor parameters. A facility is provided by the drive to dynamically measure motor data – the “autotune” function. ***The following procedures are carried out prior to the fitting of ropes.***

For clarification that a successful Autotune has been completed, it is recommended that the Drive Trip Log is reset before carrying out an Autotune. Upon completion the Trip Log should be checked to confirm an error was not logged. This can be done by turning parameter **#L39** (Reset Trip Log) On. The parameter will instantly turn off. To confirm the reset was done correctly check parameter **#L29** (first trip in logger) it should display “None”.

Precautions

These instructions should be read in their entirety before proceeding. It is the responsibility of the competent person to take all precautions as required when conducting the following procedures.
A rotational autotune is recommended. If a stationary autotune is used and problems are experienced a rotating autotune must be carried out.
It is important that the lift car is prevented from moving whilst a rotational autotune is being conducted and that the motor shaft can revolve freely. This normally implies that the lift is adequately secured in the well to prevent movement and the ropes lifted from the drive sheave and additionally that the brake is lifted.

Ensure that no fault condition is present and follow the flow chart below, depending if the setup is Gearless Permanent Magnet (RFC-S) mode or Closed Loop Geared or Gearless (RFC-A) or Open Loop:

Note: Some Gearless Permanent Magnet (RFC-S) motors have low saliency. In this instance a Stationary autotune will fail to calculate the encoder phase offset value correctly. TVC advises a rotational tune on a permanent magnet motor. This is the only guaranteed way to learn the motor parameters correctly.

The autotune should be carried out 3 times to make sure consistent values are measured. The following parameters should be noted on each tune and compared for consistency.

All modes: RFC-A / RFC-S / Open Loop (RFC-A Sensor less) – Stationary and Rotating Autotune
#B33 Transient Inductance
#B34 Stator Resistance

Mode: RFC-S - Rotating Autotune only
#C13 Position Feedback Phase Angle

AUTOTUNE

ROTATING AUTOTUNE

1. Read precautions
2. Carry out Rotation Check
3. Change Parameter #A21/{F27}to L25 And SAVE parameters
4. Check / set motor parameters (see overleaf)
5. Set Parameter #A22/{B11} (Autotune) to 2 (Rotating)
6. Enter and hold Test direction
7. AUTOTUNE
   - Gearless: Motor turns a fraction of a revolution
   - Geared: Motor turns at 2/3 speed for 40 seconds
8. Successful? Drive displays "NONE"
   - No [Error] → Resolve problem → Set Parameter #A22/{B11} (Autotune) to 2 (Rotating)
   - Yes [Parameter #A22/{B11}= 0]
9. Change Parameter #A21/{F27} to D03
10. Save parameters
11. END

PRECAUTIONS ROTATING AUTOTUNE

1. These instructions should be read in their entirety before proceeding.
2. It is the responsibility of the competent person to take all precautions as required when conducting the following.
3. It is important that the lift car is prevented from moving whilst an auto tune is being conducted and that the motor shaft can revolve freely. This normally implies that the motor be disconnected from the gearbox where fitted or that the lift is adequately secured in the well so as to prevent movement and the ropes lifted from the drive sheave, and additionally that the brake is lifted.
4. Ensure that if the motor is disconnected from the gearbox, then the motor shaft key is secured or removed, as the motor rotates during autotuning.
5. Ensure that no fault condition is present.

PRECAUTIONS STATIONARY AUTOTUNE

**If you elect to perform a Stationary autotune on a Gearless Permanent Magnet Motor (RFC-S), it should be carried out three times to ensure consistent values are measured, most importantly, Drive parameter #C13 Position Feedback Phase Angle.

1. These instructions should be read in their entirety before proceeding.
2. It is the responsibility of the competent person to take all precautions as required when conducting the following.
3. It is important that the lift car is prevented from moving whilst an auto tune is being conducted. This normally implies that the brake supply be disconnected.
4. Ensure that no fault condition is present.

STATIONARY AUTOTUNE **

1. Read precautions
2. Disconnect brake
3. Change Parameter #A21/{F27} to L25 And SAVE parameters
4. Check / set motor parameters (see overleaf)
5. Set Parameter #A22/{B11} (Autotune) to 1 (Stationary)
6. Enter and hold Test direction
7. AUTOTUNE
   - Motor noise heard for up to 20 seconds
8. Successful? Drive displays "NONE"
   - No [Error] → Resolve problem → Set Parameter #A22/{B11} (Autotune) to 1 (Stationary)
   - Yes [Parameter #A22/{B11}= 0]
9. Change Parameter #A21/{F27} to D03
10. Save parameters
11. Reconnect brake
12. END

AUTOTUNE RESULTS

Stator Resistance #A24{B34}	
Transient Inductance #A23{B33}	
Encoder Phase Angle Gearless only #A25{C13}	

Thames Valley Controls

Rotation Check

Motor direction can usually be changed by swapping motor phases. Exception: - For RFC-S Permanent Magnet Type, the direction of rotation cannot be reversed by swapping motor phases. The reversal of direction is achieved by changing a parameter in Ethos Two.

Connect PR to CTD, or instruct the controller to run using the Panel Test Pushes, and ensure that the motor rotates in the down direction, or alternatively, the direction can be changed in the Ethos Two:

Press: Checklist → Jog Up/Down → Drive Forward = Up.

This parameter can be changed to OFF = DN

Motor Encoder Used For Positioning

When an Ethos Two has no Limax or Governor Encoder and an encoder is fitted to the lift motor, the E300 drive can output a simulated set of encoder signals for use by the Ethos Two for shaft positioning.

The E300 drive parameters are configured:

#C01 = Drive encoder type = **Site specific (e.g. SCEndat, AB)**
#C03 = Drive encoder rotary pulses per revolution = **Site specific (e.g. 1024, 2048, 4096)**
#C28 = Encoder simulation source = **J53** (Drive encoder position)
#C31 = Encoder simulation mode = **Hardware**

With **#C28** & **#C31** set up as above, the simulated encoder outputs to the Ethos Two will have the same PPR as the motor encoder input **#C03**, therefore, the Ethos Two "**Pri Encoder PPR**" needs to be set to the value in **#C03**.
The Ethos Two "**Motor Speed**" needs to be set the same as drive parameter **#E07** (Nominal Elevator Speed RPM).
Note: Any changes made to Ethos 2 "**Motor speed**" will require a new shaft learn to be completed.

Pre Shaft Learn Checks

Check system is counterweighted correctly.
Using the Profile Screen, confirm the lift moves at the correct speed on inspection control.

Then run the car empty and fully loaded. Should any instability be felt within the drive, please contact TVC Customer Support Dept. for further advice.

Follow the General Installation Guidelines from this point.

E300 Drive / Ride Quality Troubleshooting

The table below lists some common problems seen and corrective action to take:

Description	Possible Cause & Corrective Action
Motor snatching away on start	Motor Driving Through Brake a) Check Brake is wired correctly and it's getting the correct voltage. b) Increase Pattern Delay Ethos settings. c) Increase **#D04** E300 Drive.
Rollback during start	E300 Drive Settings a) Check **#I22** (Start Lock Enable) is enabled. b) Increase **#I20** (Start Lock P Gain). c) Adjustment to the Start Speed Loop Gains **#I01** & **#I02** will help with the control at start, however too high a value will result in instability and acoustic noise.
Motor emitting acoustic noise	E300 Drive Settings a) Current Loop Filters **#I05** & **#I10** Recommended value 1ms to 4ms. b) Encoder Filter **#C09** Recommended value 1ms to 2ms. c) Reduce Current Loop P Gains **#I03** & **#I08** by 10%.

	Do not change the drive's maximum switching frequency (#B13) without consulting the factory. The drive is sized to suit the default of 8kHz. Installation a) Check Motor and Encoder wiring is terminated correctly (ref to TVC Drawings).
Overshoot during change of speed	E300 Drive Settings a) Overshoot can occur during operation where there is a change in speed due to the speed control loop proportional gain being too low. The speed control loop proportional gain **#I06** (Run) should be increased. Too high a value will cause motor acoustic or instability.
Bump on Stop	E300 Drive Setting a) Increase **#D02** Motor Toque Ramp Time by 100ms until bump is no longer felt. Note: This parameter also affects the start.
Lift not picking up full load	E300 Drive Setting/Motor Data a) Check #**B16** Symmetrical Current Limit and increase to allow full load to be picked. Caution, ensure "Current at maximum torque" value of machine is not exceeded. Refer to machine manufacturer for this value.

Testing – Over Speed Test

To test the lift in an over-speed condition, for testing over speed governors and safety gears follow the procedure below: Select Over speed Test in the checklist in software version CSV4.01 onwards.

Press: Checklist → Over speed Test.

If you have an earlier software version follow the procedure below:
Place controller on Emergency Electrical Operation, via the Panel Test buttons.
Move lift to the middle of the shaft.
Stop the lift, make sure you are safe to perform an over speed test.

Modify the following parameters in the drive:
Set F39 (Analogue Input 1 Scaling) to the value from the formula below: (Take a note of the current value, typically 1.06 as this will need to be reset after the test.)

Using the Contract Speed (Vc) and Panel Test Speed (Vpt) in the formula:

New Scaling Value =((Vc / Vpt) x 1.06) e.g. (1600 mm/s / 250 mm/s) x 1.06 = 6.784.

Set the New Scaling Value in F39.

Set E01 (Nominal Elevator Speed) to a percentage of the Contract Speed:

Over Speed Value = (Vc x (Vos%/100)) e.g. (1600 mm/s x (115 %/100)) = 1840 mm/s.

This sets the drives contract speed to the over speed value.

The lift can now be run on the test buttons until it reaches the over speed rate.
Do not save these modified parameters in the drive! A power cycle will restore the drive to the original values.

Note:
This only applies to pattern Ethos Two applications; It is customer's responsibility to ensure that motor can be run above contract speed without sustaining damage, check with motor manufacturer.
Keep a copy of parameters changed & check that they have reverted back after power off, before running.

Testing – Buffers, Energy Dissipation Type (at design speed)

Follow the procedure below to test the buffers.
Select Buffer Test in the checklist in software version CSV4.01 onwards.

Press: Checklist → Buffer Test.

If you have an earlier software version follow the procedure below:
Place controller on Emergency Electrical Operation, via the Panel Test buttons.
Move lift to the middle of the shaft.
Stop the lift, make sure you are safe to perform a buffer test / crash into the buffers.
Modify the following parameters in the drive:

Set F39 (Analogue Input 1 Scaling) to the value from the formula below: (Take a note of the existing value, typically 1.06 as this will need to be reset after the test.)

Using the Contract Speed (Vc) and Panel Test Speed (Vpt) in the formula:

New Scaling Value =((Vc / Vpt) x 1.06) e.g. (1600 mm/s / 250 mm/s) x 1.06 = 6.784.

Set the New Scaling Value in F39.

If different to contract speed - Set E01 (Nominal Elevator Speed) to the buffer design speed (Vb) in mm/s.

Buffer Speed Value = (Vb) e.g. for 1.6m/s lift buffer = 1600 mm/s.

This sets the drives contract speed to the buffer speed value.

Additionally the BFR / TFR (Bottom / Top Floor Reset Limit), DL / UL (Down / Up Terminal Limit), OTL (Final Limits) may need to be disabled or linked out temporarily.

The lift can now be run on the test buttons until it crashes into the buffers.
Do not save these modified parameters in the drive! A power cycle will restore the drive to the original values.

Note:
This only applies to pattern Ethos Two applications; It is customer's responsibility to ensure that the lift can be run into the buffers at speed without sustaining damage.
Keep a copy of parameters changed & check that they have reverted back after power off, before running. Remove any shorts or disabled limits before performing any further actions.

13. Hydraulic Lift Installation Guide

13.1. Introduction

The Ethos Two can be configured to control various hydraulic setups including: Standard hydraulic DOL / Star-Delta. Soft-Start / ELRV Hydraulic Block and Hydraulic with VF Drive (Bucher ELRV or Algi).

13.2. Step by Step Installation Sequence

The following sequence should be followed when installing the panel and commissioning the lift.
The instructions, which follow, are intended as a guide to site testing and trimming and should be read in their entirety before proceeding. The commissioning engineer has the sole responsibility for taking adequate safety precautions during the carrying out of these procedures:

Wiring and General Precautions

Do not connect or disconnect the wiring or connectors whilst the power is on.
If a VF drive is fitted: Do not touch the circuit components after turning off the main current power until the CHARGE light is extinguished.
The main drive earth terminal PE must be grounded.
Do not connect output terminals U, V, W to the AC mains incoming supply.
Do not conduct high-voltage insulation tests on the regulator. Isolate totally the regulator if insulation tests are conducted on the panel.

Mains Wiring and Motor Wiring

See Sheets 2, 6 of the wiring diagrams for connection details to hydraulic valves and any VF regulator fitted

Follow EMC guidelines in the General Installation section.

If a VF drive is fitted pay due diligence to the motor and drive EMC instructions. Due to the RF voltages and currents generated by the drive causing conducted unwanted radio frequency interference signals which by inductive/capacitive coupling can get into the supply network. It is important to pay particular attention to the EMC guidelines.

Preliminary Work

Check all safety circuits and ensure all safety circuits are in order.
Ensure lift doors are closed and remain closed.
Switch to "Emergency Electrical Operation / Panel Test or Car Top Test"

Power Up

Check any external phase sequence inhibits and correct by reversing input phases if required.
(Note the regulator is not input phase sequence conscious). Carry out a check of motor phasing and valve wiring, ensure these are as per the schematic diagrams.

Rotation Check

Motor direction can usually be changed by swapping motor phases.

Pre Shaft Learn Checks

Using the Profile Screen, confirm the lift moves at the correct speed on inspection control.
Configure any value or drive following the manufacturer’s instructions.

Follow the General Installation Guidelines from here.

Once the shaft is learnt, use the profile adjust screen to configure the slowing distance for deceleration from high speed.
Note: The reset limits BFR and TFR should be positioned at the same distance from the terminal floors as the slowing distance. If their positions are closer the lift will fail to slow in time when doing a position correction run (dive). If their distance is considerably greater than the slowing distance nuisance LTLR trips may be experienced on a dive run.

The learn run is usually carried out at inspection speed if the panel is a VF drive variant e.g. Bucher ELRV or Algi system. On a standard hydraulic the learn run may be carried out at high speed (depending on contract speed.) Optionally on all hydraulic types the learn run can be performed at levelling speed to increase accuracy.

Hydraulic Lift Relevelling / Levelling Setup

On completion of a successful shaft learn it is recommended the following steps are carried out to achieve the correct relevelling/levelling operation.

Press: Checklist → DZ Stop Distance

Select Check List from Home Screen and carry out the Door Zone Stop Distance procedure.
The value learnt following this procedure should not be greater than 20mm.

Referring to EN81-20: The stopping accuracy of the car shall be ± 10 mm. If, during e.g. loading and unloading phases, the levelling accuracy of ± 20 mm is exceeded, it shall be corrected to ± 10 mm.

The stopping accuracy and the learnt Door Zone Stop Distance value is dependent upon the control profile of the hydraulic system after the Ethos Two has removed the low speed signal. Usually the optimal Door Zone Stop Distance value given a lift speed of 0.63m/s is between 12mm and 15mm.

A note should be made of the Learnt Floor Level Values. Given a two-floor contract, the Top and Bottom floor values can be read from the Floor Map Screen. (Home Screen → Check List → Commission → Floor Map). It is important that the Floor Trims for the given floors are zero before noting down the learnt values.

The lift should then be sent to the two floors while monitoring the stopping point using the SE Current Distance Value which can be found within the Status Screen (Home Screen → Profile → Status). Adjustments can then be made to the Hydraulic Valve Control settings to target the learnt value if the lift is seen to be overshooting or stopping short of it.
For example on a Bucher system if the speeds are set correctly, Soft Stop Demand UP (parameter within the Bucher settings) can be increased if the lift is seen to be overshooting the target value when going up.

Once the lift is stopping at the target value it should be ridden to each floor noting down the error and inputting it into Floors Trim screen (Home Screen → Check List → Commission → Floor Trim).

The Relevelling performance can then be checked following this setup.

Note: For Software version CSV6.00 onwards the re-levelling performance on Hydraulics can be changed to use a run-on distance instead of run-on delay time. The re-level run-on distance can be found in Home Screen → Check List → Commission → Hydraulic Timers. This allows the lift to continue to re-level past the stop distance until the run on distance is achieved.

14. In Service Operating Instructions

14.1. Introduction

Listed below are common instructions for lift operation when in service.

14.2. Shaft access reset procedure

To restore the lift to normal operation, please complete the following steps:

Ensure it is safe to reset the system by checking there are no personnel in the lift pit or on the cartop.

a) Check the Car and Landing gates are closed, if not, they can be closed by either operating the UP/RUN/DN pushbuttons whilst in inspection control or the UP/DN push buttons whilst in emergency electrical operation.

b) Once closed, place the Cartop, Pit inspection and Emergency electrical operation switches in the "Normal" position. (Not on "Inspection/EEO")

c) Momentarily press the Shaft Access Reset push at either the lift control panel or landing level.

d) This action will reset the Shaft Door Access monitoring circuit. (*PA2A/PA2B relays energised*)

e) The lift will now be placed back into Normal / Automatic mode.

14.3. Limax3CP Pre-triggered Stopping System (only if fitted)

When "Pre-triggered stopping system" as EN81-21:5.5.2.2 / 5.7.2.2 has been specified the following details apply:

Note: The Pre-triggered stopping distances for Headroom and Pit have been set as per the completed information on the TVC ED5 forms.
It is important that these are verified by viewing the *Limax Safe Setup>Limax Factory Config* screen within the Ethos. (*Offset pretrig stop top & bottom*).
Contact TVC if the values appear wrong, they cannot be modified without returning the Limax3CP device to TVC.

The Ethos 2 has two outputs configured for Pre-trigger device <Active> and <Inactive>.
Refer to the schematic drawings for details.

The Inactive output will be on unless the lift is on either Pit or Cartop inspection control and the Limax3CP <INSP> input is present.

The Active output will only be on when the lift is placed on either Pit or Cartop inspection control and the Limax3CP <INSP> input has dropped.

Resetting - Pre-triggered stopping system when activated

Ensure it is safe to reset the system by checking there are no personnel in the lift pit or on the cartop.

a) Place the Cartop and Pit inspection switches in the "Normal" position. (Not on "Inspection")

b) Ensure the Car and Landing gates are closed.

c) Reset the "Limax3CP Top / Bottom Pre-Trig.Test Limit" Event via the solutions menu in Ethos 2.

d) If the lift has a Wittur Electronic Safety Gear (ESG), additional steps are required to allow Safety Gear reset. If not, proceed to step m) below.

e) The lift should be placed onto Emergency Electrical Operation using the panel mounted switch.

f) If the lift is at the bottom of the shaft, operate the Overtravel Override and UP pushes simultaneously, then, momentarily press the Shaft Access Reset push.

g) If the lift is at the top of the shaft, operate the Overtravel Override and Down pushes simultaneously, then, momentarily press the Shaft Access Reset push.

h) This will reset the Shaft Door Access monitoring circuit. (*PA2A/PA2B relays energised*)

i) Once reset, the pushes can be released.

j) Reset the Safety Gear. Refer to Wittur ESG operating instructions for details.

k) Reset the “Safety Gear Operated” Event via the solutions menu in Ethos 2.

l) Return the Emergency Electrical Operation switch to the OFF position.

m) Momentarily press the Shaft Access Reset push.

n) This will reset the Shaft Door Access monitoring circuit. (*PA2A/PA2B relays energised*)

o) The lift will now be placed back into Normal / Automatic mode.

Appendix A: Devices Needed for Initial Site Installation - Lift controller using the Limax3CP.

Fit and wire the following external devices to the controller terminals to allow the system to operate under “Inspection Control” for initial site installation. Additionally set “Hoist Mode” in the MMI checklist so door limits and car network events are ignored. ***If in doubt, please contact the factory.***

Refer to the site-specific drawings for further details.

External Device [#] These devices are optional features. Engineer to remove as necessary and remove this note	Connected between controller terminals
Top & Bottom Final Limits #	MSA - FL
Limax3CP (OC contact)	FL - OTL
Safety Gear Switch	OTL - SGS
Overspeed Governor #	SGS – OS
Buffer Switch	OS – BS
Pit Inspection Control Stop Switch	BS - APS
Auxiliary Pit Stop Switch #	APS – PCS
Pit Stop Switch	PCS - PSP
OSG Pit Pulley Weight Switch #	PSP - PWS
Limax3CP Tape Presence Switch	PWS - TPS
Machine Room Stop Switch #	TPS – MSP
Cartop Stop Switch	STP1 - STP
Cartop Inspection Control Stop Switch	STP – CTS
Cartop Inspection Control Switch	CTS – TTRX
Cartop Inspection Control Run Command (Make this switch to run Up or Down)	PR – CTP
Cartop Inspection Control Run Command UP (Make this switch to run Up)	CTP – CTU
Cartop Inspection Control Run Command DN (Make this switch to run Down)	CTP – CTD
Pit Inspection Control Switch	TTRX – TTX
Inspection UP Limit #	TU - TUP
Inspection Down Limit #	TD - TDN
Car Gate Contact	G1 – CG
Landing Gate Contacts	CG – GL
Overspeed Governor Anti-Creep Switch #	BC1 – BC2
Overspeed Governor Anti-Creep Switch #	BC3 – BC4
Motor Encoder #	Refer to drawings
Limax3CP (SGC output) #	B24V - SGC
Fire alarm contact (To prevent the Fire alarm warning buzzer operating)	MS - FAM
Alternate floor fire alarm contact (To prevent the Fire alarm warning buzzer operating) #	MSA - ALTF
Fire service switch (To prevent the Fire alarm warning buzzer operating)	MS - FSR
Fit the following panel link if the Shaft Door Access Reset switch, Pit and Car roof Door Access Switches are not fitted. **Ensure the link is removed once the switches are fitted**!	**GL** to **NRM**

Important Notice: Temporary Lift Operation Without Safety Devices

If none of the standard safety devices are currently installed, the following connections can be made as a minimum to enable the lift to operate temporarily with a Pendant Control whilst on Hoist Mode: :

MSA to STP	TTRX to TTX	G1 to CG	CG to GL	GL to NRM	BC1 to BC2 *Only required when OSG/A3 solenoid fitted*	BC3 to BC4 *Only required when OSG/A3 solenoid fitted*

WARNING: Operating the lift in this state means **NO SAFETY FEATURES** are present or functioning. The only external Stop switch activate will be on the Pendant control. This creates a **high-risk environment** with **potential for serious injury or equipment damage**. **TVC strongly advises that all safety devices be installed and verified before any attempt is made to move the lift. Do not proceed unless absolutely necessary and only under strict supervision by qualified personnel.**

Appendix B: Limax3CP Setup Guide (only if fitted)

This guide gives detail on the use of the Limax3CP with an Ethos Two controller.

The unit is shipped from TVC pre-configured and must only be used on the lift specified on the drawings, contact TVC for further support.

The unit is factory configured to cover the following functions required by EN81, depending on requirements:

Overspeed Monitor and Safety Gear Tripping.
Final Limit Switches Top and Bottom.
ETSL Device for reduced buffer stroke.
Lock bridging and Uncontrolled Movement Detection.
Inspection Limits. EN81-20/21.

Read this guide in conjunction with the Limax3CP Safety Manual, Tape Installation guide and the Ethos Two User Guide. These guides can be downloaded from the TVC website.

Installation and Commissioning

Install as per the schematics supplied, **make sure the unit serial number and CRC number (in the status screen) line up with lift specified.** The tape presence switch supplied with the tape mounting kit must be installed and wired in to satisfy code. The unit needs to be taught the extreme limits of the shaft and floor levels before going into service. The panel will work on Hoist and Emergency Electrical Operation prior to teaching the reference limits.

Software Operation

The Ethos Two checklist has various buttons for setup: Limax Safe Setup, Floor Teach, Floor Adjust and Limax Status/Test. Within these screens there are options for teaching the reference positions, teaching the floor levels, adjusting the floors, adjusting the limit positions, and testing the Limax3CP safety functions.

To commission the lift, firstly teach the system the limits of travel within the shaft (reference positions). This involves placing the car then counterweight on the buffers and teaching these positions. Next teach the floor levels. The car must be moved to each floor level manually. There is no option to automatically learn the floor levels.
Floor levels can then be adjusted, in a similar way to floor trimming on a standard system.
Within the setup screens the position of the final limits and inspection limits can be adjusted.

There is a dedicated screen for displaying the status of the unit and testing the system. The unit’s CRC will be displayed on this screen.

Limax3CP Setup Screens - Overview

To setup the Limax3CP safe system follow the steps below:

Make sure the Limax is configured correctly in the Factory Config screen.
Check the CRC of the unit matches the one set in the Ethos 2.

Step 1) - Checklist > Limax Safe Setup

Teach the reference positions, the top and bottom extreme limits of the shaft.

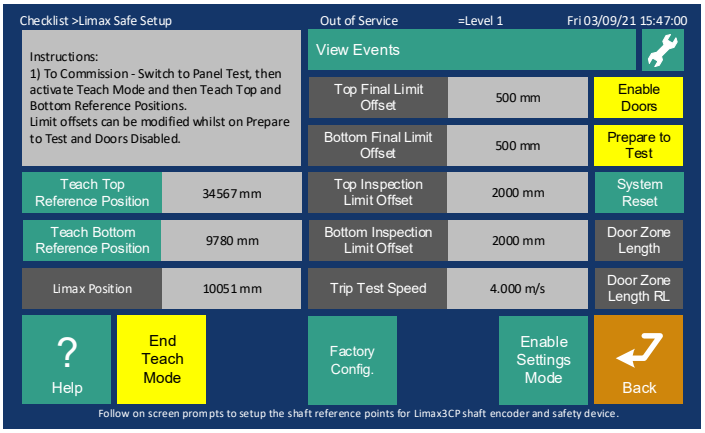

Step 2) - Checklist > Floor Teach

Teach all the floor levels, move the car to each level in sequence. Once complete the car will run in normal operation.

Perform a DZ stop learn after this step.

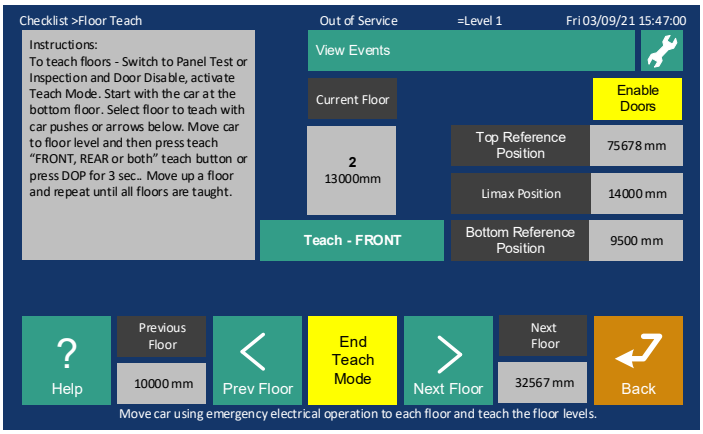

Step 3) - Checklist > Floor Adjust

Check each floor level for accuracy.

Switch to floor adjust mode and move levels as necessary.

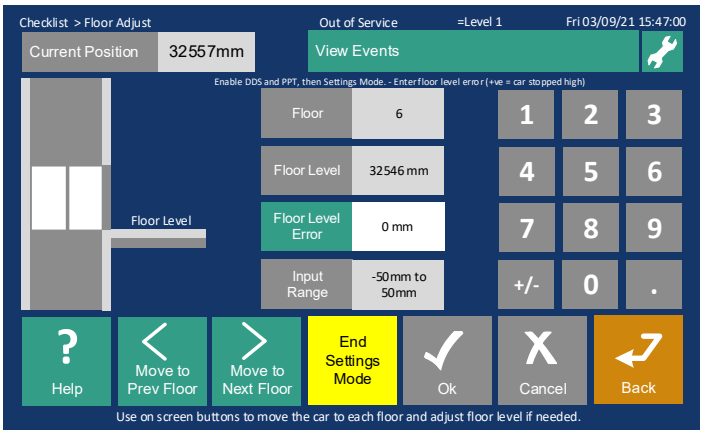

Step 4) - Checklist > Limax Status/Test

Follow the prompts to test, as needed.

Diagnose any problems from this screen.

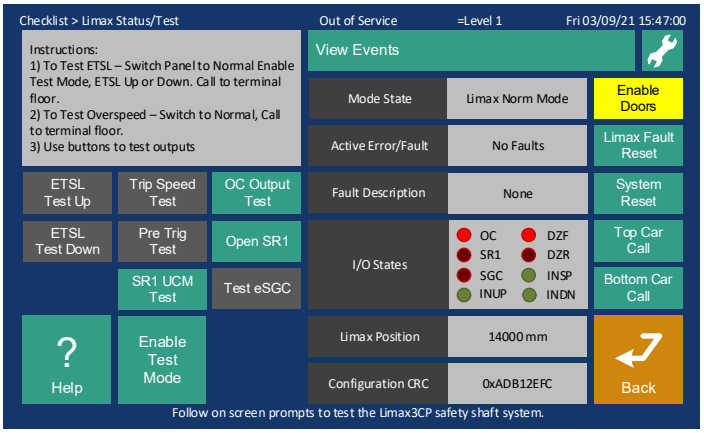

Teaching the Reference Positions

Arrive at this screen from Checklist > Hoist Group

Limax Safe Setup

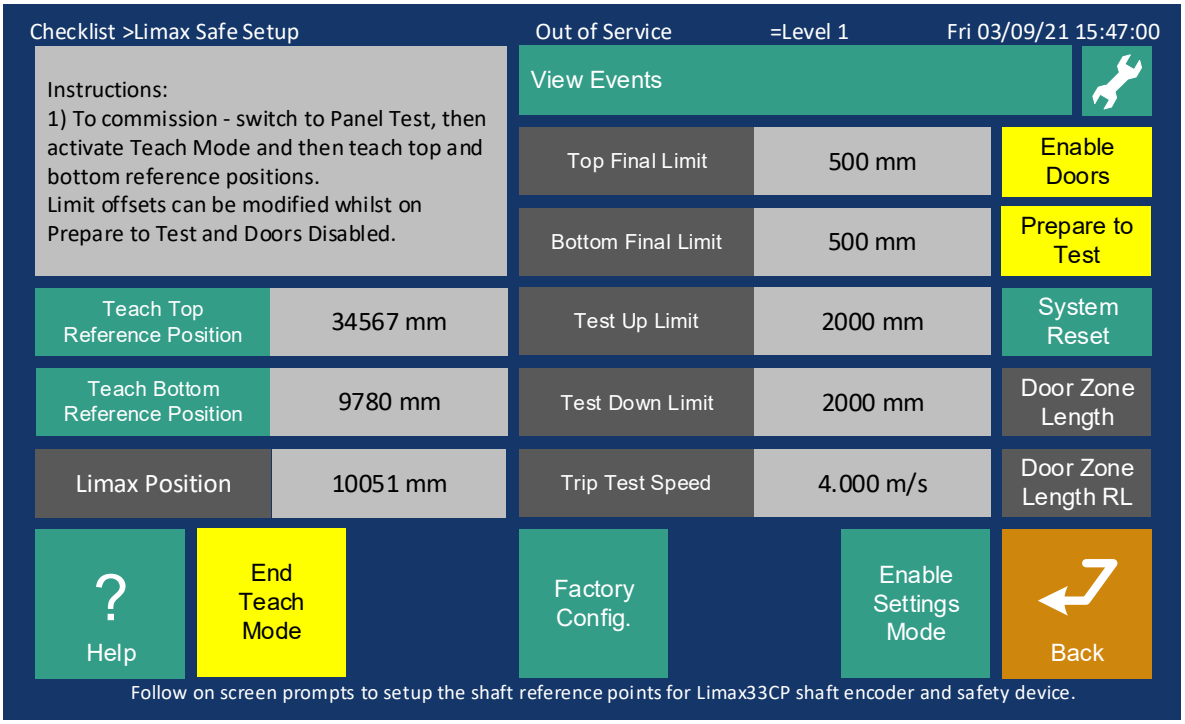

Teach mode – To Teach / Learn the Top and Bottom Reference Positions.

Limax Teach will only work if the following conditions are met:

1) In Emergency Electrical Operation (Panel Test - PTR Input Active).

Sequence of Teach Operation:

1) Select “Limax Safe Setup” from checklist.
2) Place car on “Door Disable”
3) Press the “System Reset” button wait 20 seconds for the Limax to re-boot.
4) Place in “Teach Mode” with the Enable Teach button.
5) Using the panel test pushes - Move car to top of the shaft so the counterweight is on the buffers.
6) Press teach top reference position.
7) Using the panel test pushes - Move car to bottom of the shaft so the car is on the buffers.
8) Press teach bottom reference position.
9) Move car to bottom floor level.
10) Press “End Teach Mode” to activate the Limax3CP.

During teach mode event code 300 **"Limax3CP Teach Mode"** is logged.
Once the upper and lower reference positions are taught the lift can be switched to inspection control.

Limit buttons

Top Final Limit Offset Displays distance of the Top final Limit with respect to the Top Reference Position, this can be adjusted in settings mode.

Bottom Final Limit Offset Displays distance of the Bottom Top final Limit with respect to the Bottom Reference Position, again this can be adjusted.

Top Inspection Limit Offset

Displays distance of the Top Inspection Limit with respect to the Top Reference Position or Upper Stopping System point if the EN81-21 setting is active for lifts with reduced head room.

Bottom Inspection Limit Offset

Displays distance of the Bottom Inspection Limit with respect to the Bottom Reference Position or Lower Stopping System point if EN81-21 setting is active for lifts with reduced pit depth.

Trip Test Speed

Displays the speed at which the testing of the Limax overspeed feature is carried out at. This does not affect the actual overspeed tripping in normal operation, just gives the ability to test the feature at a lower speed.

Reset and Factory Config buttons

System Reset

Press this to send the unit a reset command, this will reboot the device.
Wait 20 seconds for the unit to re-boot before sending other commands.

Factory Config

Press to bring up the factory configured settings.
Note these cannot be modified without returning the unit to TVC.

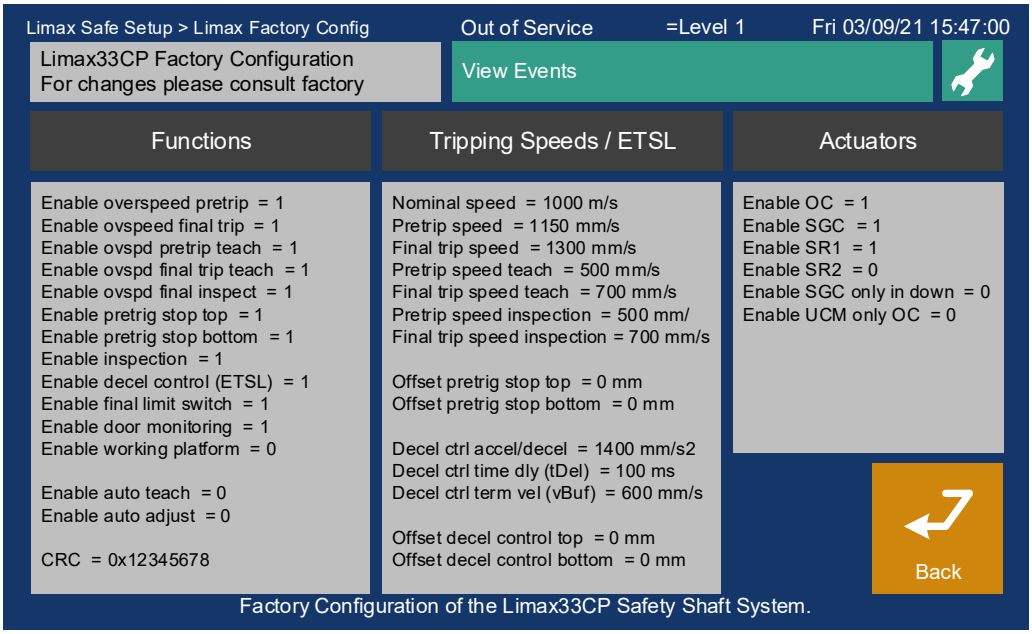

Teaching the Floor Levels

Arrive at this screen from
Checklist > Commission Group

Floor Teach

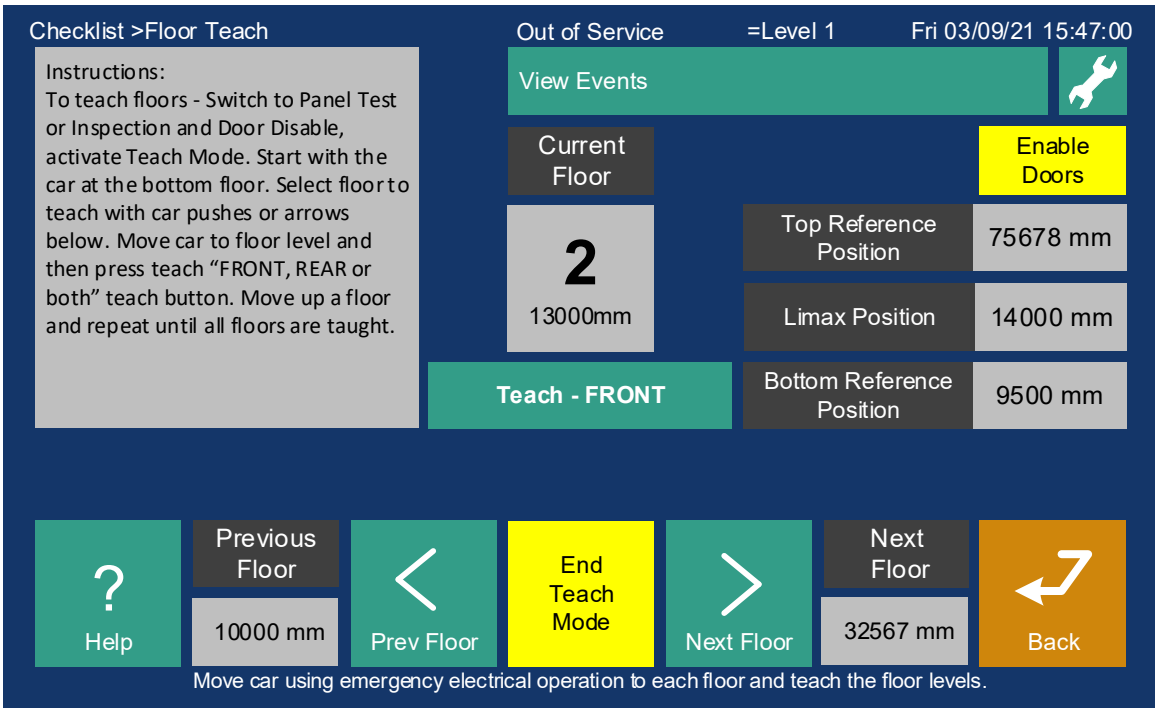

Teach mode – To Teach / Learn the Floor Levels.

Floor Teach will only work if the following conditions are met:

1) In Emergency Electrical Operation (Panel Test - PTR Input Active) or In Inspection Control (Test – TTR Active) **

Sequence of Teach Floor Operation:

1) Select "Floor Teach" from checklist.
2) Disable doors.
3) Place in "Teach Mode".
4) Move the lift using the panel test buttons, or car top controls. **
5) Starting at the bottom floor, position the lift as close to floor level as possible.
6) Select floor 1 with the arrows on the MMI or with the car buttons, the selected car button will flash to signify teach mode.
7) Press "Teach – FRONT / REAR / BOTH" depending on pre-set floor location table or press the DOP push for 3 seconds if in the car. Confirm the floor level is registered. The car push will stay lit for 5 seconds to confirm a teach is requested.
8) The position distance will be reset to 10m once the bottom floor is taught.
9) Select "Next Floor" to increment the floor display.
10) Move the car to the next floor and repeat the process until the top floor is reached.
11) Press "End Teach Mode" to activate the Limax3CP.

** Note
If the Limax3CP is factory-configured for a "Pre-triggered stopping system" according to EN81-21:5.5.2.2 / 5.7.2.2 (Reduced headroom or Pit), the "Learn the Floor Levels" feature for any floor levels within the Pre-trigger zone(s) can only be performed using Emergency Electrical Operation (Panel Test - PTR Input Active) and not using Inspection Control (Test – TTR Active).
Floor levels outside of the Pre-trigger zone(s) can be learnt using either Emergency Electrical Operation (Panel Test - PTR Input Active) or Inspection Control (Test – TTR Active).

During teach mode event code 300 **"Limax3CP Teach Mode"** is logged.
Once the floors and reference positions are taught the panel can be switched to normal operation.

Adjusting the Floor Levels

Arrive at this screen from
Checklist > Commission Group

Floor Adjust

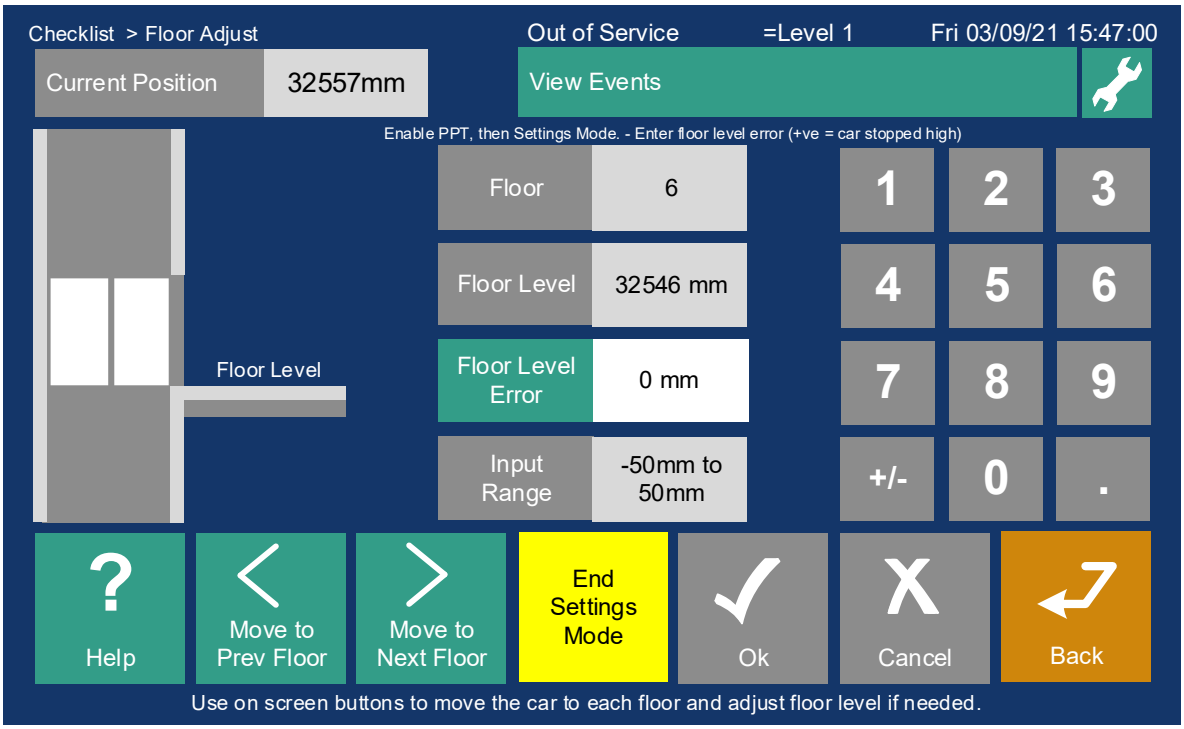

Settings mode – To Adjust Floor Levels.

Floor Adjust, settings mode will only work if the following conditions are met:

1) In Normal (LAR Input Active) + Doors Disabled + Prepare to Test Active.

Sequence of Teach Adjust Operation:

1) Prior to adjusting floors make sure the car is stopping consistently and carry out a “DZ Stop Distance” learn. The DZ Stop Distance learn button is in the checklist.
2) Select “Floor Adjust” from checklist.
3) Enable “Settings Mode”.
4) Move the car to the floor to be adjusted, by using the “Move to” buttons. The car will be moved automatically by placing a car call.
5) Once the car is stationary at the taught level the floor can be adjusted up or down by up to 50mm. If the level needs moving further re-teach the floor.
6) If re-levelling is enabled the car will re-level to the new position.
7) Move to the next floor to be adjusted using the “Move to Next/Prev” buttons.
8) Press “End Settings Mode” to activate the Limax3CP.

Testing the Limax3CP system.

Arrive at this screen from Checklist > Test Group

Limax Status / Test

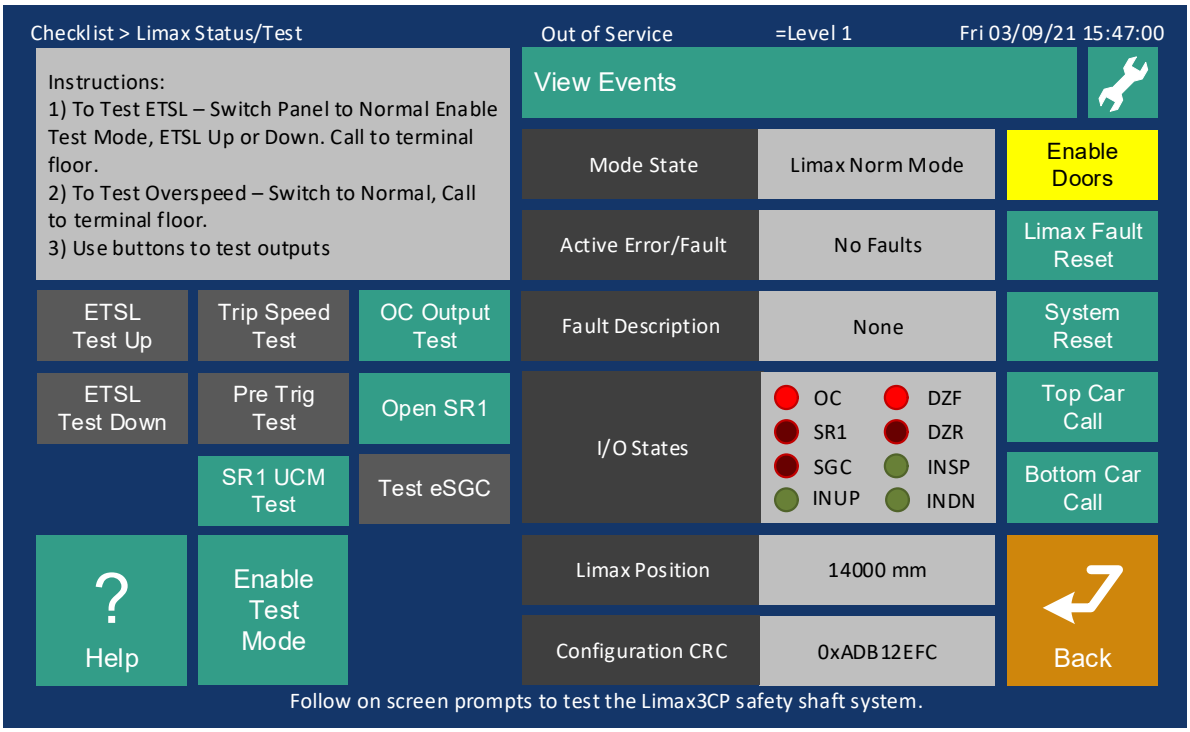

Test mode – To Test the Up and Down ETSL function (If Pre-configured / Required).

Limax Test will only work if the following conditions are met:

1) In Normal (LAR Input Active) + Doors Disabled.
2) Safety Circuit and Locks made up.

Testing ETSL for Reduced Buffer Stroke - Sequence of Operation:

1) Move the car to the bottom floor.
2) Select “Limax Status/Test” from checklist.
3) Place in “Enable Test Mode”
4) Place in “ETSL Test Up” sub mode.
5) Move car from lowest level to top level with MMI car call. Limax OC should trip with ETSL mid shaft.
6) Place in “ETSL Test Down” sub mode.
7) Move car from top level to lowest level with MMI car call. Limax OC should trip with ETSL mid shaft.
8) Press “End Test Mode” to cancel and return to normal.

During test mode event code 301 **"Limax3CP Test Mode"** is logged.

Test mode – To Test the Trip Speed (If Pre-configured / Required).

Trip Speed Test to Test Overspeed Functionality.

Once in “Trip Speed Test” sub mode, Repeat the sequence as above for the ETSL test e.g. run the car from terminal to terminal.
The Limax will trip once the car reaches the pre-set “Trip Test Speed” which can be adjusted from the “Limax Safe Setup” screen.

Test mode – To Test the Pre-Trigger Stopping Points for inspection operation (If Pre-configured / Required).

This test proves the pre-trigger inspection stopping points that are used in case of reduced headroom in the pit and car top escape spaces, see EN81-21. Test is carried out in normal with Door Disable set, and lift mid shaft.

The pre-trigger inspection stopping points can be tested by selecting the “Pre Trig Test” once in Test mode. Move the car to a terminal floor by placing a top or bottom call. The Limax should trip at the point the pre-trigger stopping points are set. This will be carried out at inspection speed.

Limax SR1 UCM Test

The SR1 UCM Test allows the SR1 turn off command to be disabled for 10 seconds. This allows the car to leave the floor by placing a car call with SR1 still turned on, thus testing the Limax3CP UCM feature. The Limax3CP will trip with the unintended movement fault.

Limax Output Testing

The OC / SR1 and eSGC outputs can be tested / toggled by pressing the relevant buttons.
These tests only work when the car is stationary. An event code 303 **"Limax3CP OC Contact Open”** is logged during the OC test this can be reset in the solutions screen.

Additional screen info buttons

Mode State — Displays Current Mode, Pre-Com, Teach, Normal, Settings or Test and sub modes.

Active Error/Fault — Shown in orange if there is an active fault from the Limax unit.

Fault Description — The active faults are scrolled here.

I/O States — Shows IO from the Limax unit (see manual). Note: INSP signifies the EN81-21 input is on Inspection Control.

Configuration CRC — This shows the units config CRC, if this is red it does not match the Ethos Two’s CRC and speed will be limited to dive speed. The CRC is factory set in both the Ethos Two and the Limax unit.

If a fault is active or the CRCs don’t match the event code 302 **"SE Limax3CP Fault or Error"** is logged.

Additional screen function buttons

Enable Doors — Shortcut for disabling doors, test and teach mode will not work unless DDS is active.

Limax Fault Reset — Press this button to clear certain active Limax faults.

System Reset — Press this to send the unit a reset command, this will reboot the device.

Background Limax Services

Limax Reset Service
Twice a day the Ethos Two will send an OC test command to the Limax, this is done at the 1st and 2nd Limax reset times. The times are configurable through the MMI. These are defaulted to 01:00 am and 02:00 am.
Twice a year a full reset is commanded. This happens on the 1st of February and the 1st of August.

When idle, the lift will shut its doors and then sit there for approx. 10 seconds whilst it resets, then the lift will go back into service.
The test is also carried out when coming off inspection or emergency electrical operation.

During the reset service the event code 299 **“Limax3CP Reset Active”** is logged, this can be silenced so the event is not logged.

If the eSGC output is enabled e.g. electronic safety gear fitted, the twice-yearly full reset is not carried out. Instead, there is a manually resettable event logged "Limax3CP System Reset Required" if a full reset hasn’t been carried out for over a year. Resetting the event via the “Solutions” screen will force a full Limax reset.

Note:
Tripping the eSGC output will cause the electronic safety gear to operate. This might require additional procedures and equipment to release the car once the safety gear is engaged.

Limax3CP Constraints of use

Storage Temperature:	-10 ºC to +60 ºC
Operating Temperature:	0 ºC to +40 ºC Note: The ambient temperature surrounding the controller cabinet must be between 0 ºC and 40 ºC.
Humidity Operating Range:	0 - 90% relative humidity (non-condensing)
IP Rating:	IP2X Protect against dust, moisture and water ingress.
Max operating life:	20 Years
Operation height:	Up to 2000 m above sea level

The worst case reaction times of relay contacts OC, SR1 and SR2 when a safety function is triggered is <55 ms and <45 ms for the eSGC.

Constraints for Installation of magnetic tape according to its instruction manual must be observed
A tape presence detector that trips on break of the magnetic tape must be installed.

Abbreviations.

CAN Controller area network
ETSL Emergency terminal speed limiting
OC Over-bridgeable contact
SGC Safety gear contact
SR1 Safety relay 1
UCM Unintended car movement

Appendix C: Limax3CP Annual Testing (only if fitted)

Below are listed various tests that need to be carried out annually with the Limax3CP system.

These include: Unintended Car Movement protection check.
Final Limit functional checks.
Overspeed tripping functional check.
eSGC Electronic Safety Gear operational check.

Procedure to test the UCM (unintended car movement) detection facility on the TVC Ethos control panel when used with the Dual Brake interface.

Application of Dual brake as unintended car movement stopping element in the Ethos Two control panel system for traction lifts. This system uses the Limax3CP device for door bridging/door zone circuit and to detect UCM.

Field tests as requested by clause 6.3 of EN 81-20 can be performed to check the correct operation of the detection for upwards and downwards stopping elements and to verify the correctness of the self-monitoring.

The test shall be carried out with the fully loaded car located one floor above the lowest and with the landing doors closed and locked. During the field test the car is forced to execute a movement while the doors are open (preferably simulated or otherwise safely organized). As soon as the car leaves the door-zone, the stopping elements shall be activated and hold the car.

To test this element of the system, perform the following checks:

a) Using the Ethos Two “Limax Status/testing” menu in the checklist screen, activate the “Door Disable” button. This will prevent the doors operating.

b) Press the “SR1 UCM Test” button, then activate either a “Top Floor” or “Bottom Floor” call. This will initiate a journey.

c) When the lift car is moving the Limax3CP should detect the UCM state once the car leaves the door zone. It will drop its OC and SR1 outputs to signal the motion contactors to de-energise immediately to drop the brake coils and the lift motor (via the safe torque off signal).

d) The Ethos Two will log a “Limax3CP Uncontrolled Mvmnt.Err.” event which is manually resettable via the solutions menu in the Ethos 2. Resetting this event will cause the Limax3CP to perform a system re-boot.

e) If the Limax3CP reports “Limax3CP Re-level Overspeed Err” instead, reduce the acceleration rate to approx. 0.3m/s by selecting the comfort speed profile. Do this temporarily to test the feature and revert after the test.

f) This simulates the situation when the car has unintended movement outside the door zone whilst the car has its doors open.

Testing Dual Brake Monitoring

Self-monitoring functionality in the Ethos Two control panel for the verification of the correct sequence of the Dual Brake signals as part of the unintended car movement protection of the lift.

To test the Dual Brake monitoring feature, perform the following:

a) Starting: Remove BLC1 signal to the Ethos 2 prior to the starting sequence.
The Ethos Two will log a “Brake Fail, Starting” event.

b) Moving: Remove BLC1 signal to the Ethos 2 whilst the lift is running.
The Ethos Two will log a “Brake Fail, Moving” event.

c) Stopping: Link the BLC1 input to +ve feed whilst the lift is running.
The Ethos Two will log a “Brake Fail, Stopping” event once the lift stops.

d) Repeat the above steps for the BLC2 input.

Three consecutive “Start” or “Moving” failures will invoke a “Brake Confirm Fail” event; a single “Stopping” failure will invoke the same event.

Following any of the above tests, the UCM detection status is stored in a non-volatile memory and is cleared only when the lift maintenance engineer selects the related menu in the Ethos to reset the lift.

Procedure to test the UCM (unintended car movement) detection facility on the TVC Ethos control panel when used with the A3 Over-Speed Governor Solenoid interface.

Application of A3 Over-Speed Governor Solenoid interface as unintended car movement stopping element in the Ethos Two control panel system for traction lifts. This system uses the Limax3CP device for door bridging/door zone circuit and to detect UCM.

Field tests as requested by clause 6.3 of EN 81-20 can be performed to check the correct operation of the detection for upwards and downwards stopping elements and to verify the correctness of the self-monitoring.

The test shall be carried out with the fully loaded car located one floor above the lowest and with the landing doors closed and locked. During the field test the car is forced to execute a movement while the doors are open (preferably simulated or otherwise safely organized). As soon as the car leaves the door-zone, the stopping elements shall be activated and hold the car.

To test this element of the system, perform the following checks:

a) Using the Ethos Two “Limax Status/testing” menu in the checklist screen, activate the “Door Disable” button. This will prevent the doors operating.

b) Press the “SR1 UCM Test” button, then activate either a “Top Floor” or “Bottom Floor” call. This will initiate a journey.

c) When the lift car is moving the Limax3CP should detect the UCM state once the car leaves the door zone. It will drop its OC, eSGC and SR1 outputs to signal the motion contactors to de-energise immediately to drop the OSG solenoid, brake coils and the lift motor (via the safe torque off signal).

d) The Ethos Two will log a “Limax3CP Uncontrolled Mvmnt.Err.” event which is manually resettable via the solutions menu in the Ethos 2. Resetting this event will cause the Limax3CP to perform a system re-boot.

e) If the Limax3CP reports “Limax3CP Re-level Overspeed Err” instead, reduce the acceleration rate to approx. 0.3m/s by selecting the comfort speed profile. Do this temporarily to test the feature and revert after the test.

f) This simulates the situation when the car has unintended movement outside the door zone whilst the car has its doors open.

Testing OSG coil Monitoring

Ethos Two control panel functionality to operate the over-speed governor solenoid activation and the verification of the correct opening and closing of the solenoid as part of unintended car movement protection of the lift.

To test the verification of this feature, perform the following tests:

a) Before the lift goes on a journey remove the “SGS” input to the panel or Ethos Two. Ethos will log a manually resettable event “Safety Gear Operated” this can be reset via the solutions menu.

b) To prove the OSG solenoid is dropped prior to a journey remove the OSG switch wire from BC4 terminal. The Ethos will timeout during the start and log a “Drive Start Fail” event. This simulates OSG solenoid failure to de-energise.

c) Prior to starting a journey remove the OSG switch wire in the BC1 terminal, the Ethos will timeout during the start and log a “Drive Start Fail” event. This simulates OSG solenoid failure to energise.

d) To prove failure of the OSG solenoid to lift: Prior to starting a journey remove the OSG solenoid wire from SGC terminal, the Ethos will timeout during the start and log a “Drive Start Fail” event.

e) These tests will prove the OSG solenoid and its contacts are operating correctly.

f) Isolate the panel from the main supply, switch the Handwind switch ON, Check A3 OSG solenoid is energised. (This will allow authorised persons to handwind / release trapped passengers without engaging the safety gear)

Following any of the above tests, the UCM detection status is stored in a non-volatile memory and is cleared only when the lift maintenance engineer selects the related menu in the Ethos in order to reset the lift.

Procedure to test the UCM (unintended car movement) detection facility on the TVC Ethos control panel when used with the Bucher iValve.

Application of UCM/A3 valve as unintended car movement stopping element in the Ethos Two control panel system for hydraulic lifts. This system uses the Limax3CP device for door bridging/door zone circuit and to detect UCM.

Field tests as requested by clause 6.3 of EN 81-20 can be performed to check the correct operation of the detection and downwards stopping elements and to verify the correctness of the self-monitoring.

The test shall be carried out with the fully loaded car located one floor above the lowest and with the landing doors closed and locked. During the field test the car is forced to execute a downwards movement while the doors are open (preferably simulated or otherwise safely organized). As soon as the car leaves the door-zone, the stopping elements shall be activated and hold the car.

To test this element of the system, perform the following checks:

a) Using the Ethos Two “Limax Status/testing” menu in the checklist screen, activate the “Door Disable” button. This will prevent the doors operating.

b) Press the “SR1 UCM Test” button, then activate either a “Top Floor” or “Bottom Floor” call. This will initiate a journey.

c) When the lift car is moving the Limax3CP should detect the UCM state once the car leaves the door zone. It will drop its OC, eSGC and SR1 outputs to signal the motion contactors to de-energise immediately to drop the iValve and the lift motor (via the safe torque off signal).

d) The Ethos Two will log a “Limax3CP Uncontrolled Mvmnt.Err.” event which is manually resettable via the solutions menu in the Ethos 2. Resetting this event will cause the Limax3CP to perform a system re-boot.

e) If the Limax3CP reports “Limax3CP Re-level Overspeed Err” instead, reduce the acceleration rate to approx. 0.3m/s by selecting the comfort speed profile. Do this temporarily to test the feature and revert after the test.

f) This simulates the situation when the car has unintended movement outside the door zone whilst the car has its doors open.

Testing Bucher iValve SMA Monitoring

Self-monitoring functionality in the Ethos Two control panel for the verification of the correct sequence of the SMA signal as part of the unintended car movement protection of the lift.

To test the SMA monitoring feature during the starting and stopping states perform the following:

a) Starting: Link SI2 to MSA during the starting sequence.
The Ethos Two will log a “iCon SMA Monitor Fail” event.

b) Stopping: Remove the SI2 input during the stopping sequence.
The Ethos Two will log a “iCon SMA Monitor Fail” event.

Following any of the above tests, the UCM detection status is stored in a non-volatile memory and is cleared only when the lift maintenance engineer selects the related menu in the Ethos to reset the lift.

Procedure to test the UCM (unintended car movement) detection facility on the TVC Ethos control panel when used with the Bucher DSV-A3 valve.

Application of DSV-A3 valve as unintended car movement stopping element in the Ethos Two control panel system for hydraulic lifts. This system uses the Limax3CP device for door bridging/door zone circuit and to detect UCM.

Field tests as requested by clause 6.3 of EN 81-20 can be performed to check the correct operation of the detection and downwards stopping elements and to verify the correctness of the self-monitoring.

The test shall be carried out with the fully loaded car located one floor above the lowest and with the landing doors closed and locked. During the field test the car is forced to execute a downwards movement while the doors are open (preferably simulated or otherwise safely organized). As soon as the car leaves the door-zone, the stopping elements shall be activated and hold the car.

To test this element of the system, perform the following checks:

a) Using the Ethos Two “Limax Status/testing” menu in the checklist screen, activate the “Door Disable” button. This will prevent the doors operating.

b) Press the “SR1 UCM Test” button, then activate a “Bottom Floor” call. This will initiate a journey.

c) When the lift car is moving the Limax3CP should detect the UCM state once the car leaves the door zone. It will drop its OC, eSGC and SR1 outputs to signal the motion contactors to de-energise immediately to drop the DSV valve and the lift motor (via the safe torque off signal).

d) The Ethos Two will log a “Limax3CP Uncontrolled Mvmnt.Err.” event which is manually resettable via the solutions menu in the Ethos 2. Resetting this event will cause the Limax3CP to perform a system re-boot.

e) If the Limax3CP reports “Limax3CP Re-level Overspeed Err” instead, reduce the acceleration rate to approx. 0.3m/s by selecting the comfort speed profile. Do this temporarily to test the feature and revert after the test.

f) This simulates the situation when the car has unintended movement outside the door zone whilst the car has its doors open.

Following any of the above tests, the UCM detection status is stored in a non-volatile memory and is cleared only when the lift maintenance engineer selects the related menu in the Ethos to reset the lift.

Procedure to test the Limax3CP Overtravel or Final Limits.

To test the Limax3CP Final Limits follow the sequence below: (If Pre-configured / Required).

1) With the lift car at the bottom floor: Place the panel in EEO / Panel Test using the switch on the front of the controller door.

2) Drive the lift down until the Limax trips with a “Bottom Final Limit” fault, this message will be seen on the Limax Status/Test screen next to Active Error/Fault. The Ethos Two will log a “Limax3CP Bottom Final Limit Err.” fault in the event logger.

3) Using the OTL override button drive the lift up off the limit until the Limax fault clears. Reset the “Limax3CP Bottom Final Limit Err.” event in the “Solutions” screen. Then move the lift to the top floor.

4) Drive the lift up until the Limax trips with a “Top Final Limit” fault, this message will be seen on the Limax Status/Test screen next to Active Error/Fault. The Ethos Two will log a “Limax3CP Top Final Limit Err.” in the event logger.

5) Using the OTL override button drive the lift down off the limit until the Limax fault clears. Reset the “Limax3CP Top Final Limit Err.” event in the “Solutions” screen. The lift can then be switched off EEO / Panel Test and returned to service.

Procedure to test the Limax3CP Overspeed (Final Tripping) system and Electronic Safety Gear Output (eSGC).

Note:
Please consult manufacturers guidelines on testing the specific electronic safety gear used. This might require additional procedures and equipment to perform the test or release the system once engaged.

To test the Limax3CP Overspeed detection / Trip Speed follow the sequence below: (If Pre-configured / Required).

1) With the lift at the top floor: Place the system in Limax Test mode, Limax Test will only work if the following conditions are met:
   a. In Normal (LAR Input Active) + Doors Disabled.
   b. Safety Circuit and Locks made up.

2) During test mode event code 301 "Limax3CP Test Mode" is logged. The Limax will trip once the car reaches the pre-set “Trip Test Speed” which can be adjusted from the “Limax Safe Setup” screen.

3) Move the car to the bottom floor.

4) Select “Limax Status/Test” from checklist.

5) Place in “Enable Test Mode”, Place in “Trip Speed Test” sub mode.

6) Move car from lowest level to top level with MMI car call.

7) Limax OC and eSGC (if enabled) should open and trip with “Overspeed Final” once the car reaches the “Trip Test Speed”. The Ethos Two will log a “Limax3CP Overspeed Final Error” fault in the event logger.

8) Reset the “Limax3CP Overspeed Final Error” event in the “Solutions” screen. Resetting this event will cause the Limax3CP to perform a system re-boot. Press “End Test Mode” to cancel and return to normal if the reset does not clear the mode back to normal.

9) The sequence can be repeated in the downward direction from the top floor if required.

10) During the Overspeed test the OC output and the eSGC output will operate. If fitted, the eSGC output will cause the electronic safety gear to engage.

11) If, after the test, the gear is jammed in and requires moving before it releases this can be done by moving the panel up on the EEO pushes whilst pressing the OTL overbridge contact.

12) Additionally, if using an E300 drive the drive can be placed in Blocked Elevator Release Mode.
    Set parameter H38 = On(1). The drive the lift on the EEO pushes until the car becomes free. H38 is set to Off (0) after the mode is complete.

HW03 Handwind Node Board Installation Sheet

Introduction

The HW03 Handwind unit is a unit for displaying lift floor level for handwinding purposes. The unit should be mounted close to the lift machine so the person handwinding has visibility of the floor position when moving the lift.
Caution:- Electrically isolate the lift controller if handwinding is to be carried out. The unit will display Handwind Mode when isolated.

HW03 Modes of Operation

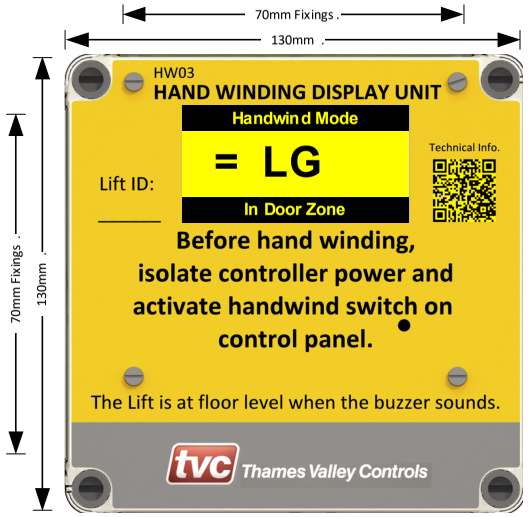

Lift on Handwind

Buzzer will sound at floor level.

Normal Operation

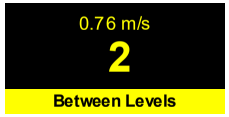

Screen will show lift speed when moving

Screen Saver:- If no activity is seen from the lift for over 2 hours the unit will enter screen saver mode. The screen will alternately be blank, show the logo and then show the normal or hand-wind screens. (Software Ver2.02 and above)

Internal PCB Layout (Rear)

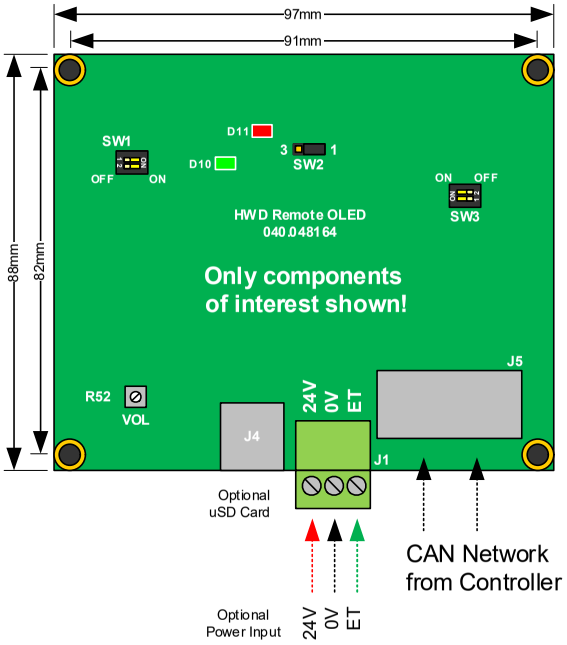

Note: Turn on SW3 DIP 1+2 if last node on the CAN network

Precautions

Observe normal precautions for handling electronic devices, avoid static electricity, dampness and extreme temperatures.
Please read this instruction sheet fully before use.
The unit is to be wired as per the relevant panel drawings.

Specification

Supply Voltage	24 V d.c.
Board Operating Current	40mA

Level Legends

The level legends can be adjusted via the Ethos Two MMI.
Press the "Indicators and Speech" button on the main screen and then select Floor Legend, use the index arrows to select the floor and then edit the floor legend characters. The character limit is 2.

DIP Settings

SW1

DIP	Name	
2	Test Dip Bit 1	Both DIPs off = Normal / Running Mode.
1	Test Dip Bit 0	DIP 1 on only = Demo Mode.
		DIP 2 on only = Functional Test.
		DIP 1 and 2 on = Display Test.

SW3

DIP	Name	
2	CAN Term	DIPs 1 and 2 on for CAN termination
1	CAN Term	These should only be set on the last node in the network. (optional)

Jumper Settings

SW2 — Place Jumper in the 1-2 position for normal operation.

Volume Adjustment

The HW03 Handwind Node board comes with built in buzzer to confirm floor level. For volume adjustment turn potentiometer R52, clockwise to increase volume and anti-clockwise to lower the volume.

Loop and Fault LED's

The Green LED (D10) will flash every 2 seconds to signify power to node and that the node is running.

The Red LED (D11) will light continuously for 4 seconds when the node is first powered up. After this point the red LED signifies various fault codes. The LED will flash every 4 seconds if the node has a fault.

Red Network Debug LED

1 flash every 4 secs = Node not communicating with Ethos.
2 flashes every 4secs = Node is experiencing data bus faults.
3 flashes every 4 secs = Node has stopped transmitting due to bus faults.
4 flashes every 4 secs = Node has stopped transmitting or receiving from the data bus

HW02 Handwind Unit With Switch Installation Sheet

Introduction

The HW02 Handwind unit is a unit for displaying lift floor level for handwinding purposes. The unit should be mounted close to the lift machine so the person handwinding has visibility of the floor position when moving the lift.
Caution:- Electrically isolate the lift controller if handwinding is to be carried out. The unit will display Handwind Mode when isolated.

HW02 Modes of Operation

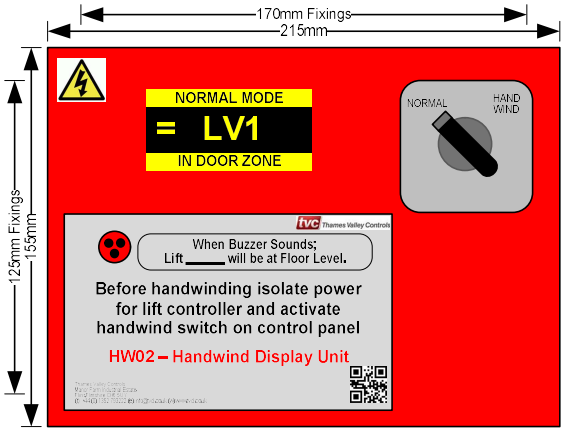

Lift on Normal

Lift on Handwind

Buzzer will sound at floor level.

Functional Test Mode

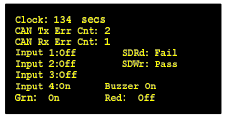

Functional test mode. Used to test inputs.

Screen Saver:- If none of the inputs to the unit change for over 2 hours the unit will enter screen saver mode. The screen will alternately be blank, show the logo and then show the normal or hand-wind screens. (Software Ver2.02 and above)

Internal PCB Dimensions and Typical Wiring

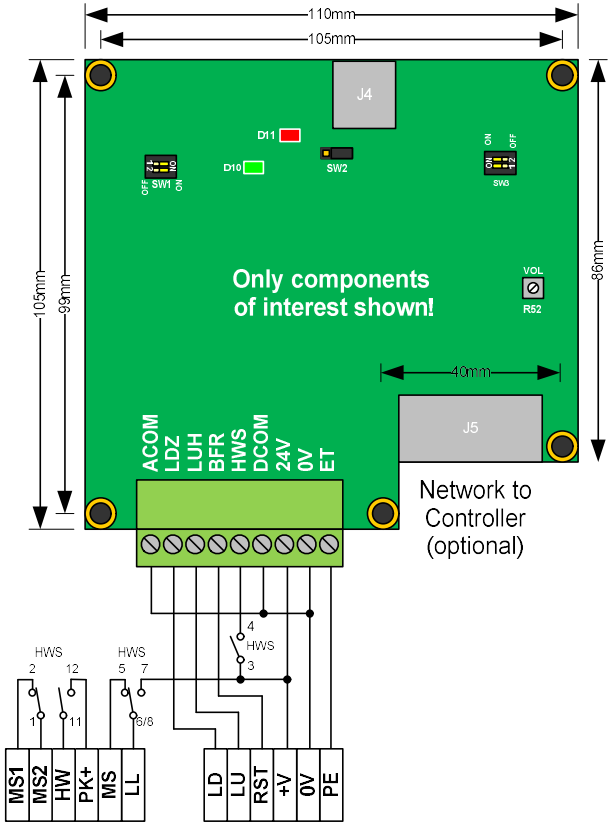

Loop and Fault LED's

The Green LED (D10) will flash every 2 seconds to signify power to node and that the node is running.

The Red LED (D11) will light continuously for 4 seconds when the node is first powered up. After this point the red LED signifies various fault codes. The LED will do a quick flash every 4 seconds if the node has a fault.

Note these are only applicable if the unit uses the Ethos Car Network Link.

1 flash every 4 secs = Node not communicating with Ethos.
2 flashes every 4secs = Node is experiencing data bus faults.
3 flashes every 4 secs = Node has stopped transmitting due to bus faults.
4 flashes every 4 secs = Node has stopped transmitting or receiving from the data bus

Precautions

Observe normal precautions for handling electronic devices, avoid static electricity, dampness and extreme temperatures.
Please read this instruction sheet fully before use.
This unit may have high voltages wired to it, ensure it is isolated before any work is carried out.
The unit is to be wired as per the relevant panel drawings, these differ depending on shaft encoder type.

Specification

Supply Voltage	12 to 24 V d.c.
Board Operating Current	40mA
Max d.c. Input Voltage (BFR/HWS)	24V d.c. (12V – 24V)
Max a.c. Input Voltage (LDZ/LUH)	110V a.c. (12V – 110V)

Micro SD Card

The unit stores its floor legend and configuration on 2 separate ".txt" files on the SD card in connector J4.
These can be adjusted via the Ethos MMI if the optional CAN Link is fitted.
If there is no link the legends can be edited by placing the SD card in a suitable PC and editing the characters. If this is carried out make sure the format of the "txt" document is not altered in any way.
Legends can be changed in file = "HW_OLED_LEGENDS.TXT"

DIP Settings

SW1

DIP	Name	
2	Test Dip Bit 1	Both DIPs off = Normal / Running Mode.
1	Test Dip Bit 0	DIP 1 on only = Demo Mode.
		DIP 2 on only = Functional Test.
		DIP 1 and 2 on = Display Test.

SW3

DIP	Name	
2	CAN Term	DIPs 1 and 2 on for CAN termination
1	CAN Term	These should only be set on the last node in the network. (optional)

Jumper Settings

SW2 — Place Jumper in the 1-2 position for normal operation.

Volume Adjustment

The HW02 Handwind Node board comes with built in buzzer to confirm floor level. For volume adjustment turn potentiometer R52, clockwise to increase volume and anti-clockwise to lower the volume.

HW02 Handwind Node Board Installation Sheet

Introduction

The HW02 Handwind unit is a unit for displaying lift floor level for handwinding purposes. The unit should be mounted close to the lift machine so the person handwinding has visibility of the floor position when moving the lift.
Caution:- Electrically isolate the lift controller if handwinding is to be carried out. The unit will display Handwind Mode when isolated.

HW02 Modes of Operation

Lift on Normal

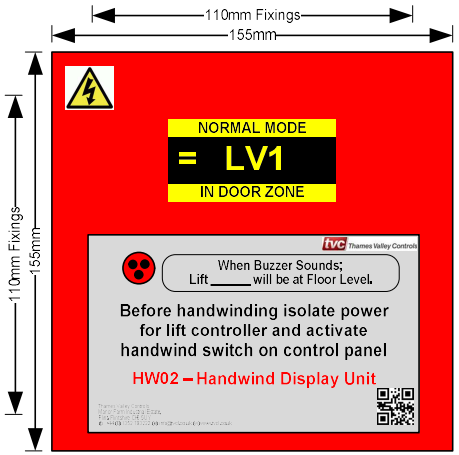

Lift on Handwind

Buzzer will sound at floor level.

Functional Test Mode

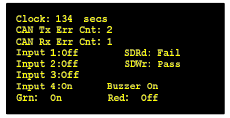

Functional test mode. Used to test inputs.

Screen Saver:- If none of the inputs to the unit change for over 2 hours the unit will enter screen saver mode. The screen will alternately be blank, show the logo and then show the normal or hand-wind screens. (Software Ver2.02 and above)

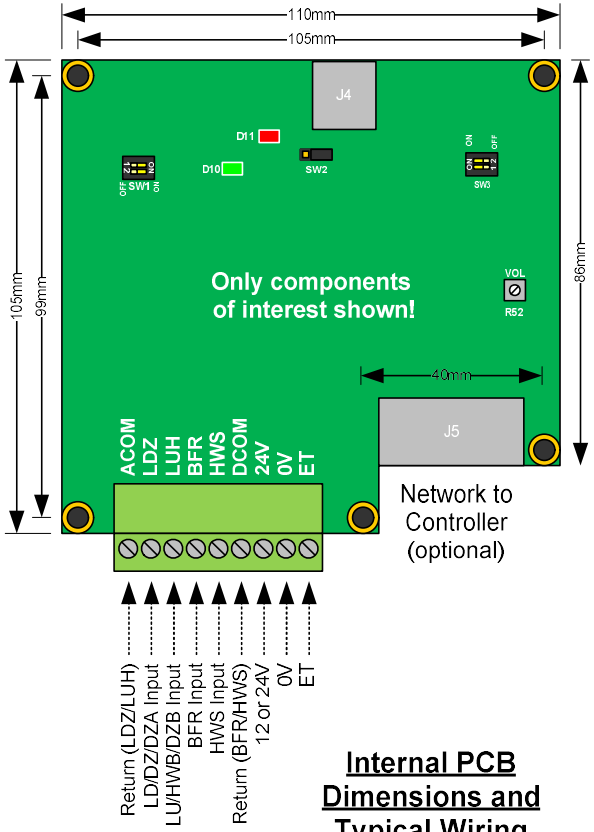

Internal PCB Dimensions and Typical Wiring

Precautions

Observe normal precautions for handling electronic devices, avoid static electricity, dampness and extreme temperatures.
Please read this instruction sheet fully before use.
This unit may have high voltages wired to it, ensure it is isolated before any work is carried out.
The unit is to be wired as per the relevant panel drawings, these differ depending on shaft encoder type.

Specification

Supply Voltage	12 to 24 V d.c.
Board Operating Current	40mA
Max d.c. Input Voltage (BFR/HWS)	24V d.c. (12V – 24V)
Max a.c. Input Voltage (LDZ/LUH)	110V a.c. (12V – 110V)

Micro SD Card

The unit stores its floor legend and configuration on 2 separate ".txt" files on the SD card in connector J4.
These can be adjusted via the Ethos MMI if the optional CAN Link is fitted.
If there is no link the legends can be edited by placing the SD card in a suitable PC and editing the characters. If this is carried out make sure the format of the "txt" document is not altered in any way.
Legends can be changed in file = "HW_OLED_LEGENDS.TXT"

DIP Settings

SW1

DIP	Name	
2	Test Dip Bit 1	Both DIPs off = Normal / Running Mode.
1	Test Dip Bit 0	DIP 1 on only = Demo Mode.
		DIP 2 on only = Functional Test.
		DIP 1 and 2 on = Display Test.

SW3

DIP	Name	
2	CAN Term	DIPs 1 and 2 on for CAN termination
1	CAN Term	These should only be set on the last node in the network. (optional)

Jumper Settings

SW2 — Place Jumper in the 1-2 position for normal operation.

Volume Adjustment

The HW02 Handwind Node board comes with built in buzzer to confirm floor level. For volume adjustment turn potentiometer R52, clockwise to increase volume and anti-clockwise to lower the volume.

Loop and Fault LED's

The Green LED (D10) will flash every 2 seconds to signify power to node and that the node is running.

The Red LED (D11) will light continuously for 4 seconds when the node is first powered up. After this point the red LED signifies various fault codes. The LED will do a quick flash every 4 seconds if the node has a fault.

Note these are only applicable if the unit uses the Ethos Car Network Link.

1 flash every 4 secs = Node not communicating with Ethos.
2 flashes every 4secs = Node is experiencing data bus faults.
3 flashes every 4 secs = Node has stopped transmitting due to bus faults.
4 flashes every 4 secs = Node has stopped transmitting or receiving from the data bus

Laser Door Zone Unit Installation

Safety

The Lasers within the Laser Door Zone Unit are classified as Laser Class 2 devices:-
These are visible lasers. This class is safe for accidental viewing under all operating conditions. However, it may not be safe for a person who deliberately stares into the laser beam for longer than 0.25 s, by overcoming their natural aversion response to the very bright light.
Warning:- Do not stare directly into the beam; avert your eyes immediately!

This unit is not suitable for Fire-Fighting Lifts to EN81-72

Specification

Sensor Specification:-

Temperature Range	*-10 to +50c*
Humidity Range	0 - 90% relative humidity (non-condensing)
Laser Class	*Class 2 (650nm red)*
Number of Lasers	*2*
Sensing Distance	*150mm to* 300mm
Supply Voltage	*10 to 30 V d.c.*
Max Operating Current	*100mA*
Polarity Protection	*Yes*
Short Circuit Protection	*Yes*
Laser IP Rating	*IP67*
Dimensions	*200 x 140 x 70mm*

Internal Laser Cable Colours:-

Brown	+24V
Blue	0VR
White	Not Connected
Black	DZF or DZR

Sensor Head Unit Mounting Instructions

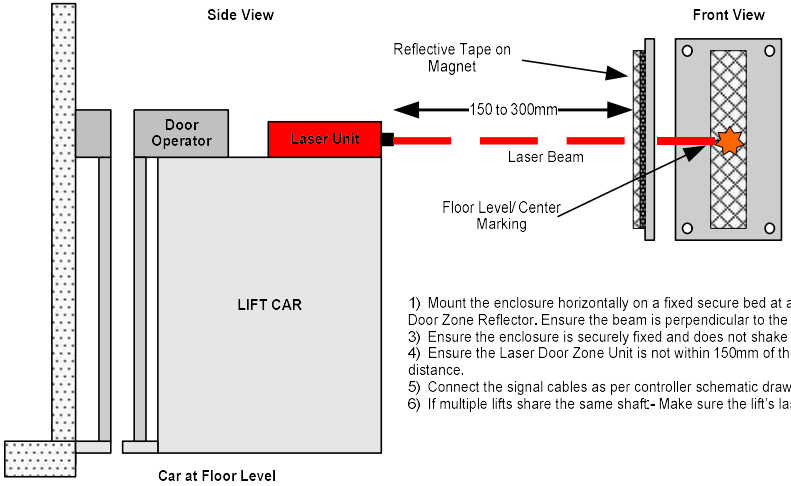

The laser unit can be mounted on either the car or the sling.
When mounted on the car, levelling may be effected by uneven car loading and compression of the car isolation mountings. If this is anticipated, we recommend the laser unit is mounted on the front of the car where it will more accurately represent the car sill position.
Alternatively the unit can be mounted on the crosshead or sling. When mounting on the sling, check that any excess movement of the sling in the guides (due to wear or adjustment) does not cause the laser beam to miss the target.

1) Mount the enclosure horizontally on a fixed secure bed at a 90°Degree vertical and horizontal angle from the Laser Door Zone Reflector. Ensure the beam is perpendicular to the reflector surface.
3) Ensure the enclosure is securely fixed and does not shake or move during travel.
4) Ensure the Laser Door Zone Unit is not within 150mm of the Door Zone Reflectors, and does not exceed 300mm in distance.
5) Connect the signal cables as per controller schematic drawing.
6) If multiple lifts share the same shaft:- Make sure the lift's laser beam only lines up with its own set of reflectors.

Reflector Mounting Instructions

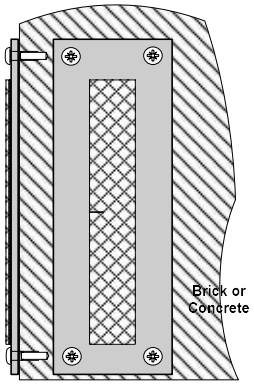

The Laser Door Zone Reflectors can be fitted many different ways depending on your application.

The reflectors comprise of a retro-reflective tape mounted on a magnetic strip, which can be attached directly to architrave or the laser door zone bracket provided. After final adjustment, the reflectors can be permanently secured using super glue.
With the laser door zone unit fitted and lasers active, the mounting options are as follows:-

Using the magnetic reflector strip only:- Architrave or Guide Rail
Using reflector strip with mounting bracket:- Wall Mounted or Uni-Strut Mounted.

Wall Fixing Method.

1) Move the car to floor level, the laser should be illuminating the wall.
2) Place the Laser Door Zone Bracket against the wall with the laser dot shining centrally on the Laser Door Zone Bracket, Mark the fixings, remove, drill and fix bracket to wall using standard Rawlplugs and self-tapping fixing screws.
3) Place reflective strip onto bracket and align.

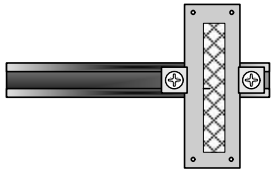

Uni-Strut Fixing Method

1) Fit the uni-strut to the shaft guides in the usual way, within door zone.
2) Move the car to floor level, Align the Laser Door Zone Bracket with the uni-strut so that the laser dot is shining centrally on the Laser Door Zone Bracket.
3) Fix the bracket to the uni-strut using usual guide clips, which can retain 3mm thick brackets. Place the Reflective tape back onto the bracket.
4) Align the Retro-Reflective tape so that the laser dot shines directly on the vertical and horizontal centres of the tape.

Front / Rear Zones

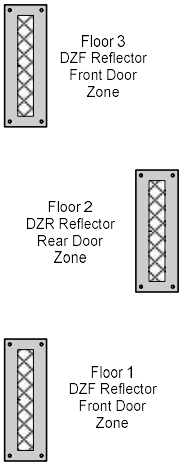

Sensor Adjustment

The cross head potentiometer on the sensors can be adjusted for sensitivity. Position the beam on the sensor at the required distance, turn the sensitivity potentiometer to its maximum position (clockwise) this will give the optimum sensitivity for a distance of 150 mm.
Note the green LED is a power indication and the yellow LED will switch on when the sensor is on target.

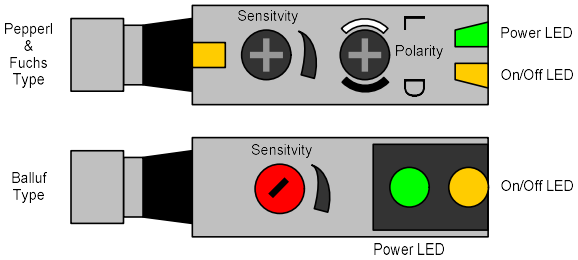

Maintenance

Ensure all reflectors and sensors are free from dust or marks, this may effect operation if dirty. If they need to be cleaned use a cloth moistened with isopropyl alcohol or similar to remove grease or dust from reflectors or sensor window.

TVC Spare Parts

Laser Sensors:-	083.000230
Full Unit:-	600.340173.1
Reflector Assembly:-	200.340051.2

Magnetic Door Zone Unit Installation

Specification

Sensor Specification:-

Temperature Range	*-25 to +70c*
Sensing Distance	*15mm to 20mm*
Supply Voltage	*10 to 30 V d.c.*
Max Operating Current	*200mA*
Polarity Protection	*Yes*
Short Circuit Protection	*Yes*
IP Rating	*IP67*
Dimensions	*200 x 140 x 70mm*

Sensor Cable Colours:-

Brown	*+24V*
Blue	0VR
Black	DZF or DZR

Front / Rear Zones

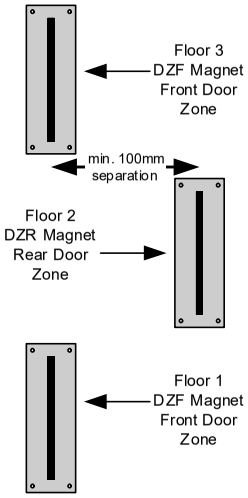

Maintenance

Keep magnets and sensors away from any strong magnetic / electrical fields or loose magnetic material such as swarf or filings.

TVC Spare Parts

Magnetic Sensor:-	083.000213
Full Unit:-	600.340173.3
Bracket Assembly:-	200.340051.3

Sensor Head Unit Mounting Instructions

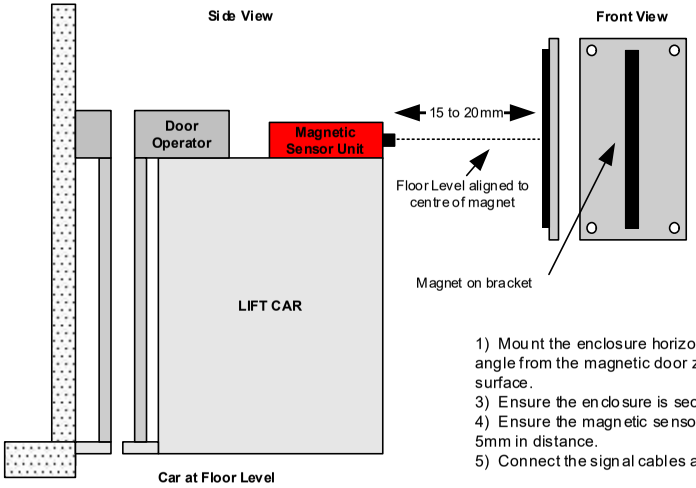

The magnetic door zone unit can be mounted on either the car or the sling.
When mounted on the car, levelling may be effected by uneven car loading and compression of the car isolation mountings. If this is anticipated, we recommend the magnetic unit is mounted on the front of the car where it will more accurately represent the car sill position.
Alternatively the unit can be mounted on the crosshead or sling. When mounting on the sling, check that any excess movement of the sling in the guides (due to wear or adjustment) does not cause the magnetic sensor to become out of alignment with the target.

1) Mount the enclosure horizontally on a fixed secure bed at a 90°Degree vertical and horizontal angle from the magnetic door zone bracket. Ensure the sensor is perpendicular to the magnets surface.
3) Ensure the enclosure is securely fixed and does not shake or move during travel.
4) Ensure the magnetic sensor unit is within 10mm of the door magnets, and does not get closer than 5mm in distance.
5) Connect the signal cables as per controller schematic drawing.

Magnet Mounting Instructions

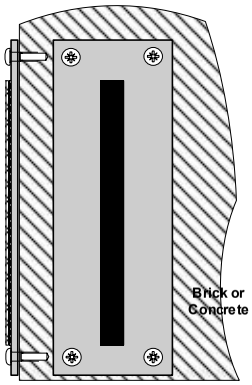

The Magnetic Door Zones can be fixed in many different ways depending on your application.
The magnets can be attached directly to architrave or guide rails or the door zone bracket provided. After final adjustment, the magnets can be permanently secured using super glue.
With the magnetic sensor unit fitted, the mounting options are as follows:-
Using the magnet only:- Architrave or Guide Rail.
Using magnet with mounting bracket:- Wall Mounted or Uni-Strut Mounted.

Wall Fixing Method.
1) Move the car to floor level.
2) Place the Magnetic Door Zone Bracket against the wall with the magnetic sensor head about 10mm away central to the Magnetic Door Zone Bracket, Mark the fixings, remove, drill and fix bracket to wall using standard Rawlplugs and self-tapping fixing screws.
3) Place magnetic strip onto bracket and align.

Uni-Strut Fixing Method.
1) Fit the uni-strut to the shaft guides in the usual way, within door zone.
2) Move the car to floor level, Align the Magnetic Door Zone Bracket with the uni-strut so that the magnetic sensor is about 10mm away from the Magnetic Door Zone Bracket.
3) Fix the bracket to the uni-strut using usual guide clips, which can retain 3mm thick brackets. Place the Magnetic tape back onto the bracket.
4) Align the Magnetic strip on the vertical and horizontal centres of the tape.

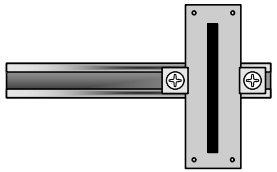

Appendix I: E300 Drive – User Menu A Parameters

User Menu A in the Nidec E300 drive is designed for essential setup, configuration, and monitoring of the motor. It provides users with access to all the necessary parameters for these tasks in a single, convenient menu.

The table below details the parameter settings for the **User Menu A** parameters. In the Ethos 2 manual, only the *Source/Destination* parameters are listed.

Menu A Parameter	Description	Source/Destination Parameter	Function
A00	Parameter mm00	-	General
A01	User Security Status All Menus	H02	
A02	Drive Control Mode	BO1	Configuration
A03	Motor Rated Current	B02	
A04	Motor Rated Voltage	B03	
A05	Motor Rated Power Factor	B04	
A06	Number Of Motor Poles	B05	
A07	Motor Rated Frequency	B06	
A08	Motor Rated Speed	B07	
A09	Drive Encoder Type	C01	
A10	Drive Encoder Rotary Pulses Per Revolution	C03	
A11	Drive Encoder Voltage Select	C04	
A12	Nominal Elevator Speed	E01	
A13	Sheave Diameter	E02	
A14	Roping	E03	
A15	Gearbox Ratio Numerator	E04	
A16	Gearbox Ratio Denominator	E05	
A20	Reset Trip Log	L39	Autotune
A21	T41 T42 Relay Output Source	F27	
A22	Motor Autotune	B11	
A23	Transient Inductance Ld	B33	
A24	Stator Resistance	B34	
A25	Position Feedback Phase Angle	C13	
A30	Total Output Current	J22	Monitoring
A31	Speed Feedback	J51	
A32	Profile Speed	J39	
A33	Actual speed	J40	
A34	Output Frequency	J60	
A35	Output Voltage	J61	
A40	Motor Torque Ramp Time	D02	Tuning
A41	Brake Control Output	D03	
A42	Brake Control Release Delay	D04	
A43	Brake Control Apply Delay	D05	
A44	Motor Torque Ramp Down Time	D32	
A45	Start Speed Loop P Gain	I01	
A46	Start Speed Loop I Gain	I02	
A47	Start Current Loop P Gain	I03	
A48	Start Current Loop I Gain	I04	
A49	Start Current Loop Filter	I05	
A50	Run Speed Loop P Gain	I06	
A51	Run Speed Loop I Gain	I07	
A52	Run Current Loop P Gain	I08	
A53	Run Current Loop I Gain	I09	
A54	Run Current Loop Filter	I10	
A55	Stop Speed Loop P Gain	I11	
A56	Stop Speed Loop I Gain	I12	
A57	Stop Current Loop P Gain	I13	
A58	Stop Current Loop I Gain	I14	
A59	Stop Current Loop Filter	I15	
A60	Start Lock P Gain	I20	

A61	Start Lock Enable	I22	
A62	Sensorless Mode Filter	C17	
A65	T5 T6 Analog Input 1 Scaling	F39	Testing
A68	Firmware Version	J04	Information
A69	Maximum Heavy-Duty Rating	J06	
A70	T41 T42 Relay Output State	F09	Diagnostics
A71	T31 STO Input 01 State	F10	
A72	T5 T6 Analog Input 1	F35	
A73	T8 Analog Input 3 Thermistor Feedback	F62	
A74	Trip 0	L29	
A75	Trip 0 Date	L41	
A76	Trip 0 Time	L42	
A77	Trip 1	L30	
A78	Trip 1 Date	L43	
A79	Trip 1 Time	L44	
A80	Blocked Elevator Release Enable Input	H38	Feature

Note: Certain parameters are not accessible in every **Drive Control Mode** of operation.

Saving parameters
When changing a parameter in **User Menu A**, the new value is saved when pressing the Enter button to return to parameter view mode from parameter edit mode.

Document Change Log

Issue	Date	Section / Page	Software Version
1.0	23/05/2017	All - First Issue	CSV2.06
2.0	22/08/2017	Install Guidelines, Events, Autotune, Initial Site Req.	CSV2.07
3.0	10/10/2017	Static Autotune, Events, Program Proc.	CSV3.00
4.0	17/01/2018	Added buffer test, Drive timer description. UCM A3 Testing.	CSV3.04
5.0	03/05/2018	Added Temperature Events, MB SI4-7 now only take 110V	CSV3.06
6.0	16/08/2018	Autotune Gearless and Geared. Hydraulic shaft learn. Software Modification Procedure.	CSV4.00
7.0	30/11/2018	Checklist order, ETSD Test, Group CAN baud. Buffer and Overspeed tests added to MMI	CSV4.01
8.0	27/06/2019	Speed deviation, Limit checks on learn, E300 Open Loop, PIT input, Recall Floors Screen.	CSV4.04
9.0	05/11/2019	A3 relevel tests. Drive Troubleshooting. Stopped Off Level Events. HW02 Sheets.	CSV4.05
10.0	11/06/2020	Added Hydraulic Levelling Setup and link for Static tune	CSV4.05
11.0	16/06/2021	Autotune log clear, IoT events.	CSV4.08
12.0	28/02/2022	Limax3CP Appendix and Checklist items, New 4IO module, New HW03.	CSV6.00
13.0	10/06/2022	Updates to Limax and E300 Drive start timing.	CSV6.00
14.0	12/10/2022	Text Corrections, Magnetic DZ Distance, Limax3CP Shorting Link Table.	CSV6.01
15.0	11/11/2022	Additions to Limax3CP Shorting Link Table.	CSV6.02
16.0	09/03/2023	Limax3CP graphic changes, Events added.	CSV7.02
17.0	12/05/2023	Added events	CSV7.04
18.0	24/10/2023	Remove shorts tables (now on drawings)	CSV7.06
19.0	14/11/2023	Edits to Traction E300 install, Added events.	CSV7.07
20.0	15/03/2024	Start timings for E300 changed. Additional Limax3CP tests added.	CSV7.09
21.0	22/10/2024	Limax3CP OC events added to logger.	CSV8.00
22.0	06/01/2025	Added shaft access reset procedure, Reordered appendices.	CSV8.02
23.0	04/01/2025	Added E300 Menu A parameter list, Appendix H.	CSV8.02
24.0	06/03/2025	Pre-triggering note, Standards dates.	CSV8.03
25.0	14/08/2025	Added Indicator install sheets, new autotune flow chart, removed E300 autotune link comment.	CSV8.05
26.0	31/10/2025	L25 autotune flow chart.	CSV8.05
27.0	09/012026	Site Install Links	CSV8.06

ethos TWO

Thames Valley Controls owns the copyright of this document which shall not be used for any purpose other than for which it is supplied and shall not be copied or given to any person or organization without written authorisation from the owner.